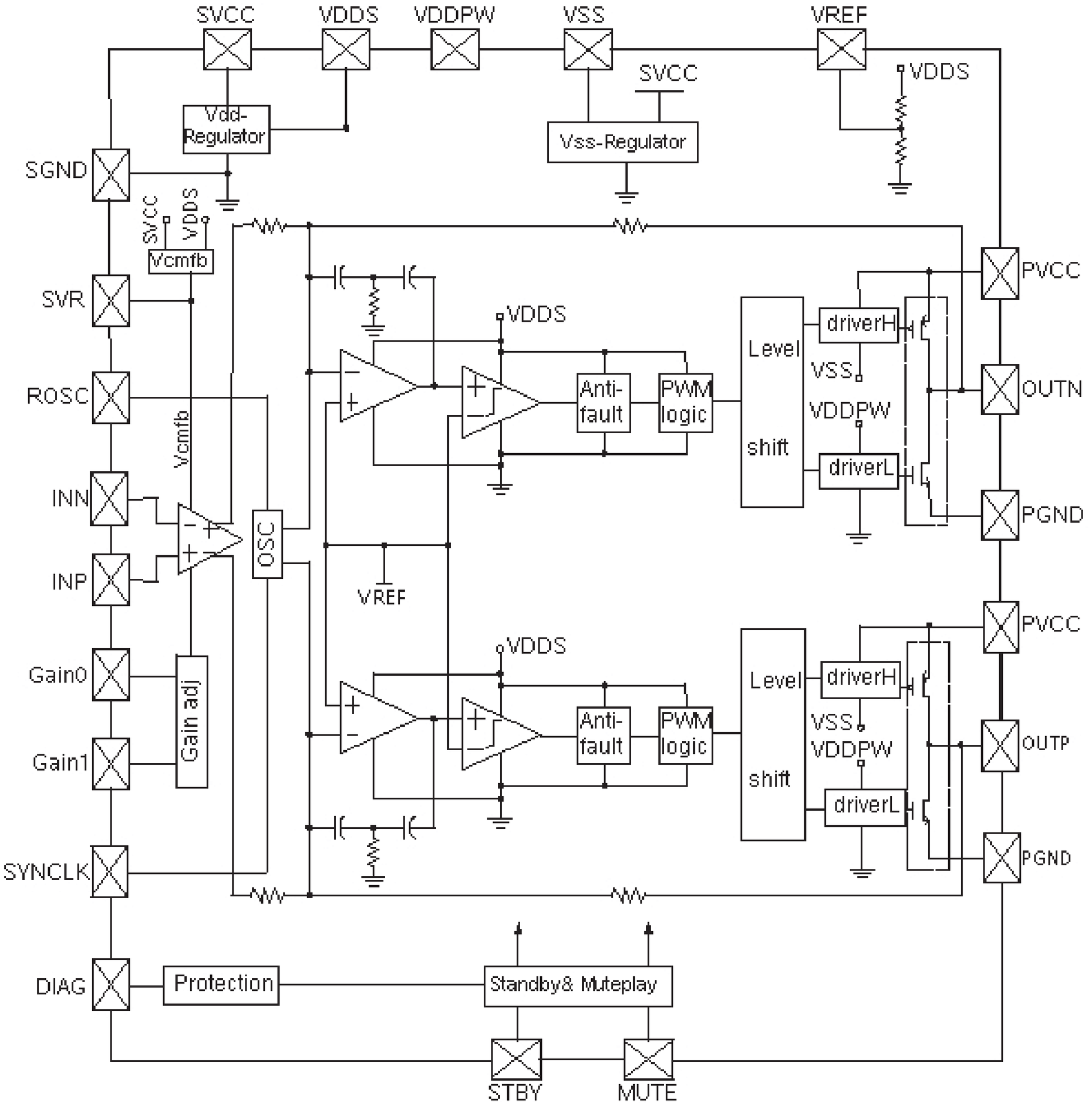
SVCC
VDDS
VDDPW
VSS
VREF
SVCC
VDDS
Vdd-Regulator
Vss-Regulator
SGND
SVCC
VDDS
Vcmfb
SVR
ROSC
Vcmfb
INN
INP
OSC
VDDS
Anti-fault
PWM logic
Level shift
driverH
VSS
VDDPW
driverL
PVCC
OUTN
PGND
VREF
VDDS
Anti-fault
PWM logic
Level shift
driverH
VSS
VDDPW
driverL
PVCC
OUTP
PGND
Gain0
Gain1
Gain adj
SYNCLK
DIAG
Protection
Standby& Muteplay
STBY
MUTE