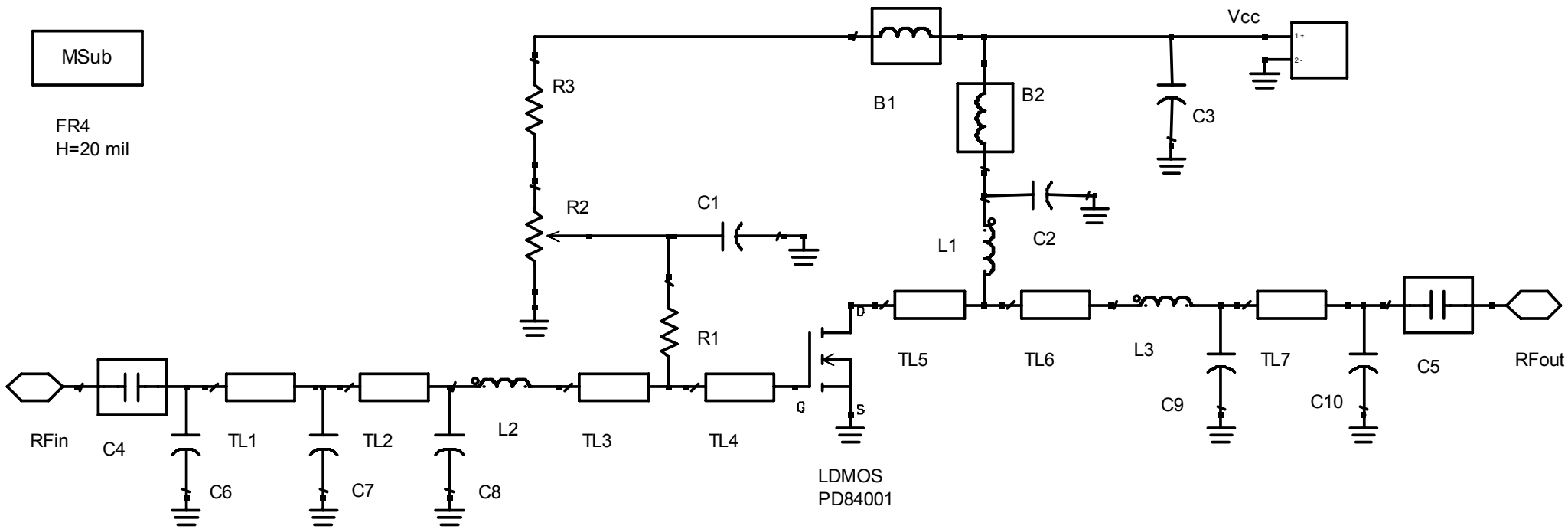DB-84001-520 Schematic