AN431
Application note

Using ST6 analog inputs for multiple key decoding

INTRODUCTION

The ST6 on-chip Analog to Digital Converter (ADC) is a useful peripheral integrated into the silicon of the ST6 family members. The flexibility of the I/O port structure allows the multiplexing of up to 13/8 Analog Inputs into the converter in a 28/20 pin device for the ST6210/15 2k ROM and ST6220/25 4k ROM families, enabling full freedom in circuit layout. Many other members of the ST6 family also offer the Analog to Digital converter.

One of the more novel and practical applications of this converter, is to decode a number of keys. The technique is to connect the keys by resistive voltage dividers to the converter inputs. An example of key detection using 10 keys is illustrated in this note.

Using the Analog to Digital converter in this fashion does not require a static current and avoids false key detection.

BASIC CIRCUIT

The basic circuit of the key decoder consists of a pull-up resistor connected to the ST6 Analog to Digital converter input with the first key directly switching to ground. The following keys are then connected in sequence to the ADC input through serial resistors. The number of keys which may be detected depends on the tolerance of the resistors used. It can be seen that if more than one key is pressed at the same time, the key detected will be the next key in the chain closest to the ADC input. This also allows the keys in the keyboard to be prioritized.

PRINCIPLE OF OPERATION

The combination of the pull-up resistor, the serial resistors and the pressed key form a resistive voltage divider, generating a different voltage at the ADC input for each key pressed. The serial resistors are selected in order to give an equal distribution of voltage between V_{DD} and V_{SS} for each switch combination to give the best noise margin between keys.

When a key is pressed, the voltage at the ADC input is given by the activated voltage divider. This analog voltage is converted by the ADC and the digital value is used to determine which switch is closed. Two successive conversions may be made to avoid the influence of key bounce.

If the top key is pressed, the voltage measured is always zero. For n keys, the resistor values should be selected such that the voltage for the second key from top is V_{DD}/n, for the 3rd - $2xV_{DD}/n$, for the

Figure 1. Analog Keyboard resistor key matrix

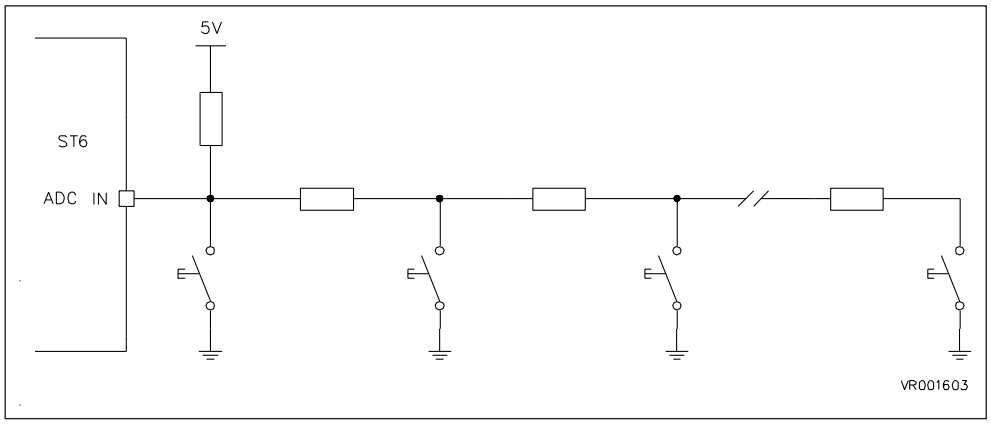

Figure 2. Multiple key press

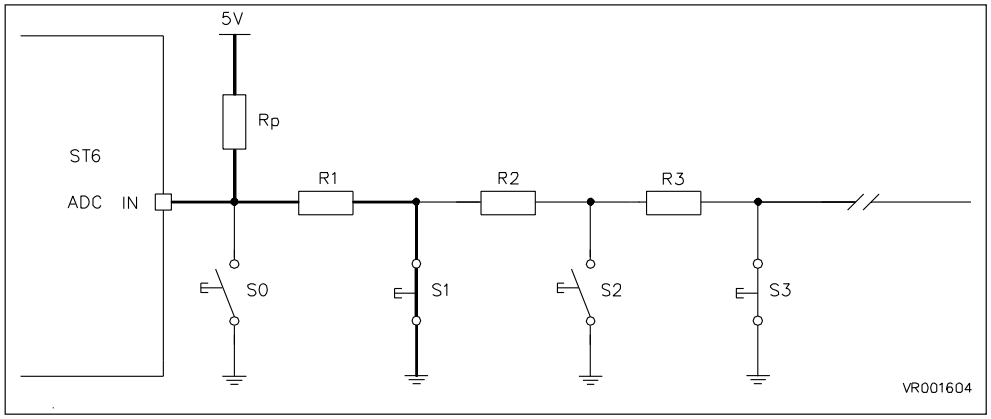

Table 1. Key code ranges

Key Nr	Valid Code Range	Distance to next key
1	0	24
2	18-1A	22
3	30-33	22
4	49-4E	21
5	63-68	20
6	7C-81	22
7	97-9B	21
8	B0-B4	22
9	CA-CD	24
10	E5-E6	25

4th - $3xV_{DD}/n$ and for the nth - $(n-1)xV_{DD}/n$. Resistor values from the tolerance set used must be selected to meet this requirement.

The recommended resistor values for a 10-key keyboard with 2% resistors from the E24 series, used with a 10kΩ pull-up resistor, are shown in table 2. If more current can be allowed, then a 1kΩ resistor can be used in which case the serial resistor values should be divided by 10.

Table 2. Used resistors and Tolerance

Resistor	Value ( )	-2% ( )
Rp	10000	9800
R1	1100	1078
R2	1300	1274
R3	1800	1764
R4	2400	2352
R5	3300	3234
R6	5100	4998
R7	8200	8036
R8	16000	15680
Active Key	**R Error Range (LSB)**	**Distance to next Key**
S0	0	24

PRACTICAL LIMITATIONS

Theoretically, for an ideal power supply, ADC and resistors, 255 keys could be detected. Practically however, it is necessary to take into account potential errors coming from:

- the power supply - the key resistivity - the resistor tolerance - the ADC error

The power supply tolerance can normally be neglected providing noise is not present at a frequency within or above the frequency range of the RC delay of the resistive divider, as the ADC reference is normally provided by the power supply of the ST6. For ST6 family members with external ADC reference voltage inputs, AV_{DD} and AV_{SS} may be used instead of V_{DD} and V_{SS}.

The sensitivity of the key can normally be neglected, as the resistance of the divider is high in comparison to it. If the key resistivity is significant, it should be added to the "serial" pull-down resistance of the different dividers. The key resistivity variation must also be added to the tolerance of the serial pull-down resistor (see resistor tolerance following).

The resistor tolerance affects the tolerance of the dividers. Two situations must be taken into account:

a) minimum value of pull-up combined with maximum values of pull-down = maximum voltage of the divider at the ADC input.

b) maximum value of the pull-up combined with the minimum values of pull-down = minimum voltage at the ADC input. These two cases give the maximum voltage variation of each divider (see Table 3). The voltage variation ranges of two dividers must not overlap otherwise the key cannot be decoded, even with an ideal converter.

Table 3. Effective Divider Resistors RX

Active Key	R -2% ( )	R +2% ( )
S0	0	0
S1	1078	1122
S2	2352	2448
S3	4116	4284
S4	6468	6732
S5	9702	10098
S6	14700	15300
S7	22736	23664
S8	38416	39984
S9	88396	92004

Realistic converters require a margin between the range of variation. In the case of a significant variation in the key resistivity, the maximum resistivity of the key has to be added to the value of the pull-down resistor in case a). For case b) no error needs to be added as the resistivity cannot be less than 0 Ω.

The linearity of the ADC converter of the ST6 is normally specified for ⎛2 LSB, therefore a minimum distance of 4 LSB is needed between the edges of the resistance tolerance ranges. For the best results, a minimum of 8 LSB should be used (see Table 4).

Table 4. Voltage at the ADC-Input,Converter Results (5V supply)

Active Key	V (Rxmin-Rpmax)			V (Rxmax-Rpmin)		
	V	hex.	dec.	V	hex.	dec.
S0	0.00	00	0	0.00	00	0
S1	0.48	18	24	0.51	1A	26
S2	0.94	30	48	1.00	33	51
S3	1.44	49	73	1.52	4E	78
S4	1.94	63	99	2.04	68	104
S5	2.44	7C	124	2.54	81	129
S6	2.95	97	151	3.05	9B	155
S7	3.45	B0	176	3.54	B4	180
S8	3.95	C9	201	4.02	CD	205

Table 5. AD-Converter Results

Active Key	R Error Range (LSB)	Distance to next Key	Valid Key Range
S0	0	24	0-0
S1	2	22	18-1A
S2	3	22	30-33
S3	4	21	49-4E
S4	5	20	63-68
S5	5	22	7C-81
S6	5	21	97-9B
S7	4	22	B0-B4
S8	3	24	C9-CD
S9	2	25	E5-E6

EXTENSION FOR WAKE UP

ST6 family members with the Analog input capacity can also generate a wake-up operation (from WAIT or STOP modes) on the pressing of a key. This can be achieved by a modification of the circuit shown in figure 1. The pull-up resistor is not connected to V_{DD} but to an additional I/O port bit. During key polling, this additional port bit is set to output mode active high, thus effectively switching V_{DD} to the pull-up resistor. The resistance of the pull-up resistor must be high enough to give no significant voltage drop, or the resulting error must be calculated and taken into account. The other I/O bit is used as the Analog input to the ADC as in the original circuit.
During the wait for the key press, the first I/O pin, used to pull the pull-up resistor high to V_{DD} while polling, is switched into a high impedance state (e.g. open drain output mode). The second I/O pin, used as the ADC input while polling, is switched to the interrupt input with pull-up mode. The internal pull-up is in the range of 100k, in comparison to the 1k - 10k of the external resistor used during polling. If any key is now pressed an interrupt will be generated if the voltage at the second I/O pin is below the Schmitt trigger low level threshold. The serial resistors in the keyboard chain must not be too high in this case, therefore the maximum number of keys is reduced in comparison to the normal mode.

Figure 3. Keyboard wake-up circuit

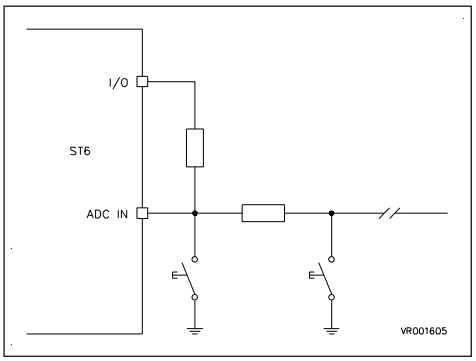

Figure 4. Keyboard reading

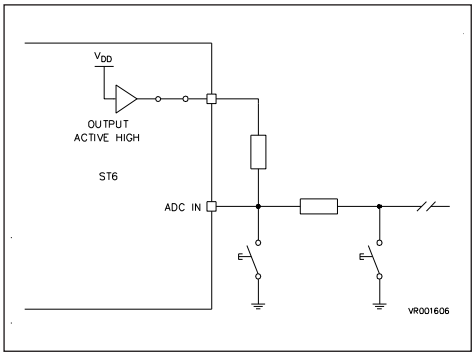

Figure 5. Interrupt configuration

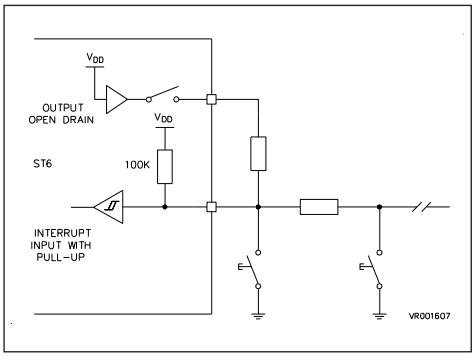

APPENDIX A: Key Input by Polling

```
;*************************************************************************
;*                                                                       *
                  *
;*                       SGS-THOMSON GRAFING                             *
;*                                                                       *
;*                  APPLICATION NOTE 431  -   ST6                        *
*
;*                                                                       *
;*           Use of ADC inputs for multiple key decoding                 *
;*                                                                       *
*
;*         With the inbuilt A/D converter of any ST6 it is easy to       *
;*         implement a small routine which enables ONE port pin, con-    *
;*         figured as an ADC input, to decode up to ten different switches*
                  *                                  *
;*         All that is necessary is to set one port pin as an ADC input  *
;*         Then the program runs in an endless loop until one of the     *
*
;*         connected keys is pushed.                                     *
*
;*         The value from the ADC data register is then used to decide   *
;*         how the program will continue,on reaction to the key-push.    *
*
;*                                                                       *
;*************************************************************************

                        ;***REGISTERS***

ddrpb      .def   0c5h  ;port B data direction register
orpb       .def   0cdh  ;port B option register
drpb       .def   0c1h  ;port B data register
adr        .def   0d0h  ;A/D data register
adcr       .def   0d1h  ;A/D control register
a          .def   0ffh  ;accumulator

                        ;***CONSTANTS***

inpall     .equ   000h  ;used for setting all pins input
peg1_2     .equ   00ch  ;border to distinguish between switch1 and switch2
peg2_3     .equ   025h  ;border to distinguish between switch2 and switch3
peg3_4     .equ   03eh  ;border to distinguish between switch3 and switch4
peg4_5     .equ   058h  ;border to distinguish between switch4 and switch5
peg5_6     .equ   072h  ;border to distinguish between switch5 and switch6
peg6_7     .equ   08ch  ;border to distinguish between switch6 and switch7
peg7_8     .equ   0a5h  ;border to distinguish between switch7 and switch8
peg8_9     .equ   0beh  ;border to distinguish between switch8 and switch9
```

```
peg9_10    .equ   0d9h   ;border to distinguish between switch9 and switch10




           ldi    ddrpb,inpall   ;sets all port B pins low – all input
           ldi    orpb,01h       ;option register:
                                 ;sets bit b0 high, the rest low
           ldi    drpb,01h       ;direction register:
                                 ;sets bit b0 high, the rest low
                                 ;– pb0 becomes analog input
                                 ;   pb1-7 become input with pull-up, but
                                 ;   are not used here (only one pin may be
                                 ;   analog input for A/D at the same time)
           ldi    adcr,30h       ;A/D control register:
                                 ; 0011 0000 – -activate A/D converter
                                 ;              -start conversion
                                 ;              -disable A/D interrupt
loop:      jrr    6,adcr,loop    ;loop until the End Of Conversion bit is
                                 ;set (indicator that a conversion has
                                 ;been completed)
           ld     a,adr ;load acc with the result of the A/D
                                 ;conversion
                                 ;now the result is compared with the
                  ; values which represent the different
;switches
sw1:       cpi    a,peg1_2       ;compare with peg1_2
           jrnz   sw2            ;A/D result was smaller than peg1_2
           jp     s1             ; – switch1 was pressed: jump to s1

sw2:       cpi    a,peg2_3       ;compare with peg2_3
           jrnz   sw3            ;A/D result was smaller than peg2_3
           jp     s2             ; – switch2 was pressed: jump to s2

sw3:       cpi    a,peg3_4       ;compare with peg3_4
           jrnz   sw4            ;A/D result was smaller than peg3_4
           jp     s3             ; – switch3 was pressed: jump to s3

sw4:       cpi    a,peg4_5       ;compare with peg4_5
           jrnz   sw5            ;A/D result was smaller than peg4_5
           jp     s4             ; – switch4 was pressed: jump to s4
```

```
sw5:        cpi     a,peg5_6        ;compare with peg5_6
            jrnz    sw6             ;A/D result was smaller than peg5_6
            jp      s5              ; — switch5 was pressed: jump to s5




sw6:        cpi     a,peg6_7        ;compare with peg6_7
            jrnz    sw7             ;A/D result was smaller than peg6_7
            jp      s6              ; — switch6 was pressed: jump to s6

sw7:        cpi     a,peg7_8        ;compare with peg7_8
            jrnz    sw8             ;A/D result was smaller than peg7_8
            jp      s7              ; — switch7 was pressed: jump to s7

sw8:        cpi     a,peg8_9        ;compare with peg8_9
            jrnz    sw9             ;A/D result was smaller than peg8_9
            jp      s8              ; — switch8 was pressed: jump to s8

sw9:        cpi     a,peg9_10       ;compare with peg9_10
            jrnz    sw10            ;A/D result was smaller than peg9_10
            jp      s9              ; —> switch9 was pressed: jump to s9

sw10:       jp      s10             ;A/D result was greater than peg9_10
                                    ; — switch10 was pressed: 0
                    ; —> switch10 was pressed: s10
                                    ;

;*** the routines handling to the reaction to the individual key presses
;*** are to be included here.

s1:
s2:
s3:
s4:
s5:
s6:
s7:
s8:
s9:
s10:
```

APPENDIX B: Key Input by Interrupt

```
;*************************************************************************
;*                                                                       *
;*                      SGS-THOMSON GRAFING                              *
;*                                                                       *
;*                 APPLICATION NOTE 431 -    ST6                         *
;*                                                                       *
;*            Use of ADC inputs for multiple key decoding                *
;*                                                                       *
;*          With the inbuilt A/D converter of any ST6 it is easy to      *
;*          implement a small routine with which you can recognize       *
;*          if one of nine connected keys is pushed by creating an       *
;*          interrupt. The program can then decide how it will react     *
;*          to the key pushed.                                           *
;*                                                                       *
;*                                                                       *
;*************************************************************************


                        ;***REGISTERS***

 ddrpb     .def   0c5h  ;port B data direction register
 orpb      .def   0cdh  ;port B option register
 drpb      .def   0c1h  ;port B data register
 ior       .def   0c8h  ;interrupt option register
 adr       .def   0d0h  ;A/D data register
 adcr      .def   0d1h  ;A/D control register
 a         .def   0ffh  ;accumulator

                        ;***CONSTANTS***

inpall     .equ   000h  ;used for setting all pins input
peg1_2     .equ   00ch  ;border to distinguish between switch1 and switch2
peg2_3     .equ   025h  ;border to distinguish between switch2 and switch3
peg3_4     .equ   03eh  ;border to distinguish between switch3 and switch4
peg4_5     .equ   058h  ;border to distinguish between switch4 and switch5
peg5_6     .equ   072h  ;border to distinguish between switch5 and switch6
peg6_7     .equ   08ch  ;border to distinguish between switch6 and switch7
peg7_8     .equ   0a5h  ;border to distinguish between switch7 and switch8
peg8_9     .equ   0beh  ;border to distinguish between switch8 and switch9

; en_kint (enable key-interrupt) sets the registers in a way that pushing
; any key will cause an interrupt. This subroutine must be called to
; re-enable the key interrupt (e.g. after handling the key service routine)
```

```
en_kint:
          ldi     ddrpb,inpall   ;sets all port B pins low – all input
          ldi     orpb,02h       ;option register:
                                 ; sets bit b1 high, the rest low
          ldi     drpb,01h       ;data register:
                                 ; sets bit b0 high, the rest low
                                 ;– pb0 becomes input, no pull-up, no int
                                 ;   pb1 becomes input with pull-up and int.
                                 ;   pb2-7 become input with pull-up, but
                                 ;   are not used here
          ldi     ior,10h        ;interrupt option register:
                                 ;– set D4: enable all interrupts
                                 ;   reset D5: falling edge on int.input(#2)
          ret                    ;return to the calling address

;*** hd_kint (handle key interrupt) interrupt service routine
;*** evaluates the data resulting in pushing a key.
;*** Interrupt vector #2 (0ff4h and 0ff5h) must point (jump) to hd_kint.

hd_kint:  ldi     drpb,03h       ;data register:
                                 ; 0000 0011
          ldi     ddrpb,01h      ;data direction register:
                                 ; 0000 0001
                                 ; – pb0 becomes output
          ldi     orpb,03h       ;option register:
                                 ; 0000 0011
                                 ; – pb0: push-pull output
                                 ; – pb1: ADC-input
                                 ;    pb2-7 become input with pull-up, but
                                 ;    are not used here
          ldi     adcr,30h       ;A/D control register:
                                 ; 0011 0000 – -activate A/D converter
                                 ;               -start conversion
                                 ;               -disable A/D interrupt
loop:     jrr     6,adcr,loop    ;waits until the End Of Conversion
                                 ; bit is set (indicator that a conversion
                                 ; has been completed)
          ld      a,adr          ;load acc with the result of the A/D
                                 ; conversion
                                 ;now the result is compared with the
                                 ; values which represent the different
                                 ; switches
```

```
sw1:        cpi     a,peg1_2        ;compare with peg1_2
            jrnz    sw2             ;A/D result was smaller than peg1_2
            jp      s1              ; – switch1 was pressed: jump to s1

sw2:        cpi     a,peg2_3        ;compare with peg2_3
            jrnz    sw3             ;A/D result was smaller than peg2_3
            jp      s2              ; – switch2 was pressed: jump to s2

sw3:        cpi     a,peg3_4        ;compare with peg3_4
            jrnz    sw4             ;A/D result was smaller than peg3_4
            jp      s3              ; – switch3 was pressed: jump to s3

sw4:        cpi     a,peg4_5        ;compare with peg4_5
            jrnz    sw5             ;A/D result was smaller than peg4_5
            jp      s4              ; – switch4 was pressed: jump to s4

sw5:        cpi     a,peg5_6        ;compare with peg5_6
            jrnz    sw6             ;A/D result was smaller than peg5_6
            jp      s5              ; – switch5 was pressed: jump to s5

sw6:        cpi     a,peg6_7        ;compare with peg6_7
            jrnz    sw7             ;A/D result was smaller than peg6_7
            jp      s6              ; – switch6 was pressed: jump to s6

sw7:        cpi     a,peg7_8        ;compare with peg7_8
            jrnz    sw8             ;A/D result was smaller than peg7_8
            jp      s7              ; – switch7 was pressed: jump to s7

sw8:        cpi     a,peg8_9        ;compare with peg8_9
            jrnz    sw9             ;A/D result was smaller than peg8_9
            jp      s8              ; – switch8 was pressed: jump to s8

sw9:        jp      s9              ;A/D result was bigger than peg8_9
                                    ; – switch9 was pressed: jump to s9
                                    ;

;*** The routines handling the reaction to the individual key presses
;*** are to be included here
```

```
s1:
s2:
s3:
s4:
s5:
s6:
s7:
s8:
s9:

;*** Each routine must end with the following lines in order to enable
;*** another interrupt when the next key is pressed.

                call en_kint ; enable another interrupt
return:         reti
```

Table 6. Revision history

Date	Revision	Description of changes
September 1992	1	Initial release
19-June-2008	2	Logo modified

Please Read Carefully:

Information in this document is provided solely in connection with ST products. STMicroelectronics NV and its subsidiaries (“ST”) reserve the right to make changes, corrections, modifications or improvements, to this document, and the products and services described herein at any time, without notice.

All ST products are sold pursuant to ST’s terms and conditions of sale.

Purchasers are solely responsible for the choice, selection and use of the ST products and services described herein, and ST assumes no liability whatsoever relating to the choice, selection or use of the ST products and services described herein.

No license, express or implied, by estoppel or otherwise, to any intellectual property rights is granted under this document. If any part of this document refers to any third party products or services it shall not be deemed a license grant by ST for the use of such third party products or services, or any intellectual property contained therein or considered as a warranty covering the use in any manner whatsoever of such third party products or services or any intellectual property contained therein.

UNLESS OTHERWISE SET FORTH IN ST’S TERMS AND CONDITIONS OF SALE ST DISCLAIMS ANY EXPRESS OR IMPLIED WARRANTY WITH RESPECT TO THE USE AND/OR SALE OF ST PRODUCTS INCLUDING WITHOUT LIMITATION IMPLIED WARRANTIES OF MERCHANTABILITY, FITNESS FOR A PARTICULAR PURPOSE (AND THEIR EQUIVALENTS UNDER THE LAWS OF ANY JURISDICTION), OR INFRINGEMENT OF ANY PATENT, COPYRIGHT OR OTHER INTELLECTUAL PROPERTY RIGHT.

UNLESS EXPRESSLY APPROVED IN WRITING BY AN AUTHORIZED ST REPRESENTATIVE, ST PRODUCTS ARE NOT RECOMMENDED, AUTHORIZED OR WARRANTED FOR USE IN MILITARY, AIR CRAFT, SPACE, LIFE SAVING, OR LIFE SUSTAINING APPLICATIONS, NOR IN PRODUCTS OR SYSTEMS WHERE FAILURE OR MALFUNCTION MAY RESULT IN PERSONAL INJURY, DEATH, OR SEVERE PROPERTY OR ENVIRONMENTAL DAMAGE. ST PRODUCTS WHICH ARE NOT SPECIFIED AS “AUTOMOTIVE GRADE” MAY ONLY BE USED IN AUTOMOTIVE APPLICATIONS AT USER’S OWN RISK.

Resale of ST products with provisions different from the statements and/or technical features set forth in this document shall immediately void any warranty granted by ST for the ST product or service described herein and shall not create or extend in any manner whatsoever, any liability of ST.

ST and the ST logo are trademarks or registered trademarks of ST in various countries.

Information in this document supersedes and replaces all information previously supplied.

The ST logo is a registered trademark of STMicroelectronics. All other names are the property of their respective owners.

© 2008 STMicroelectronics - All rights reserved

STMicroelectronics group of companies

Australia - Belgium - Brazil - Canada - China - Czech Republic - Finland - France - Germany - Hong Kong - India - Israel - Italy - Japan - Malaysia - Malta - Morocco - Singapore - Spain - Sweden - Switzerland - United Kingdom - United States of America

www.st.com