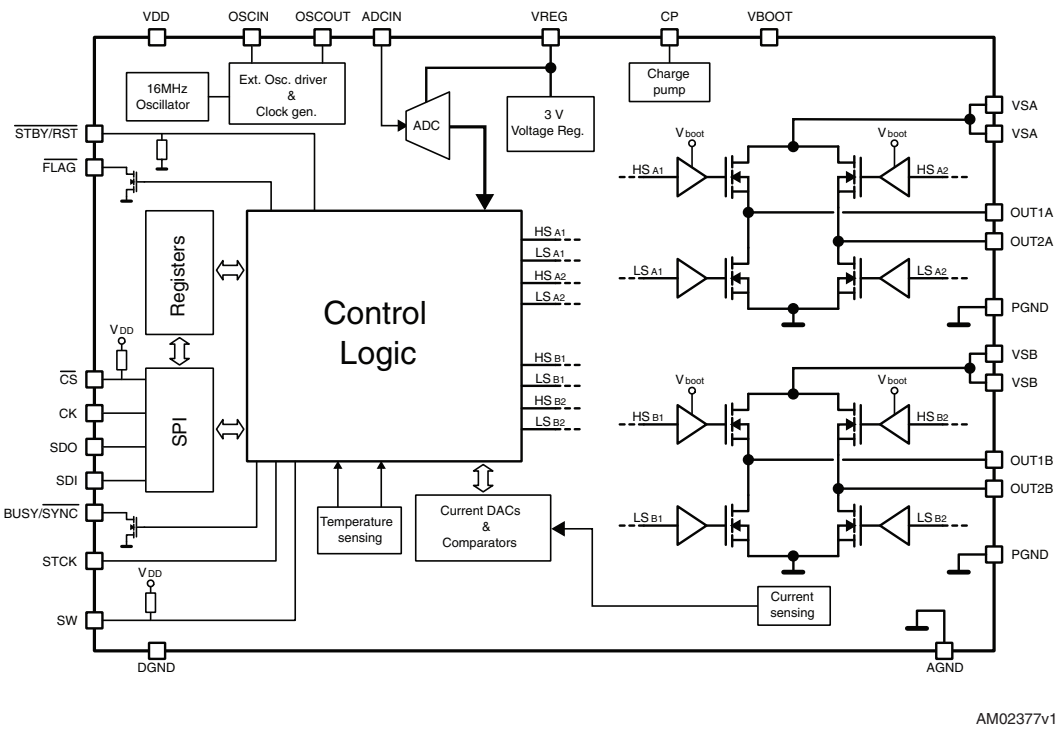
VDD
OSCIN
OSCOUT
ADCIN
VREG
CP
VBOOT
16MHz Oscillator
Ext. Osc. driver & Clock gen.
ADC
3 V Voltage Reg.
Charge pump
STBY/RST
FLAG
Registers
Control Logic
VDD
CS
CK
SDO
SDI
SPI
BUSY/SYNC
STCK
SW
DGND
HS A1
LS A1
HS A2
LS A2
HS B1
LS B1
HS B2
LS B2
Temperature sensing
Current DACs & Comparators
Current sensing
Vboot
VSA
VSA
OUT1A
OUT2A
PGND
VSB
VSB
OUT1B
OUT2B
PGND
AGND
AM02377v1