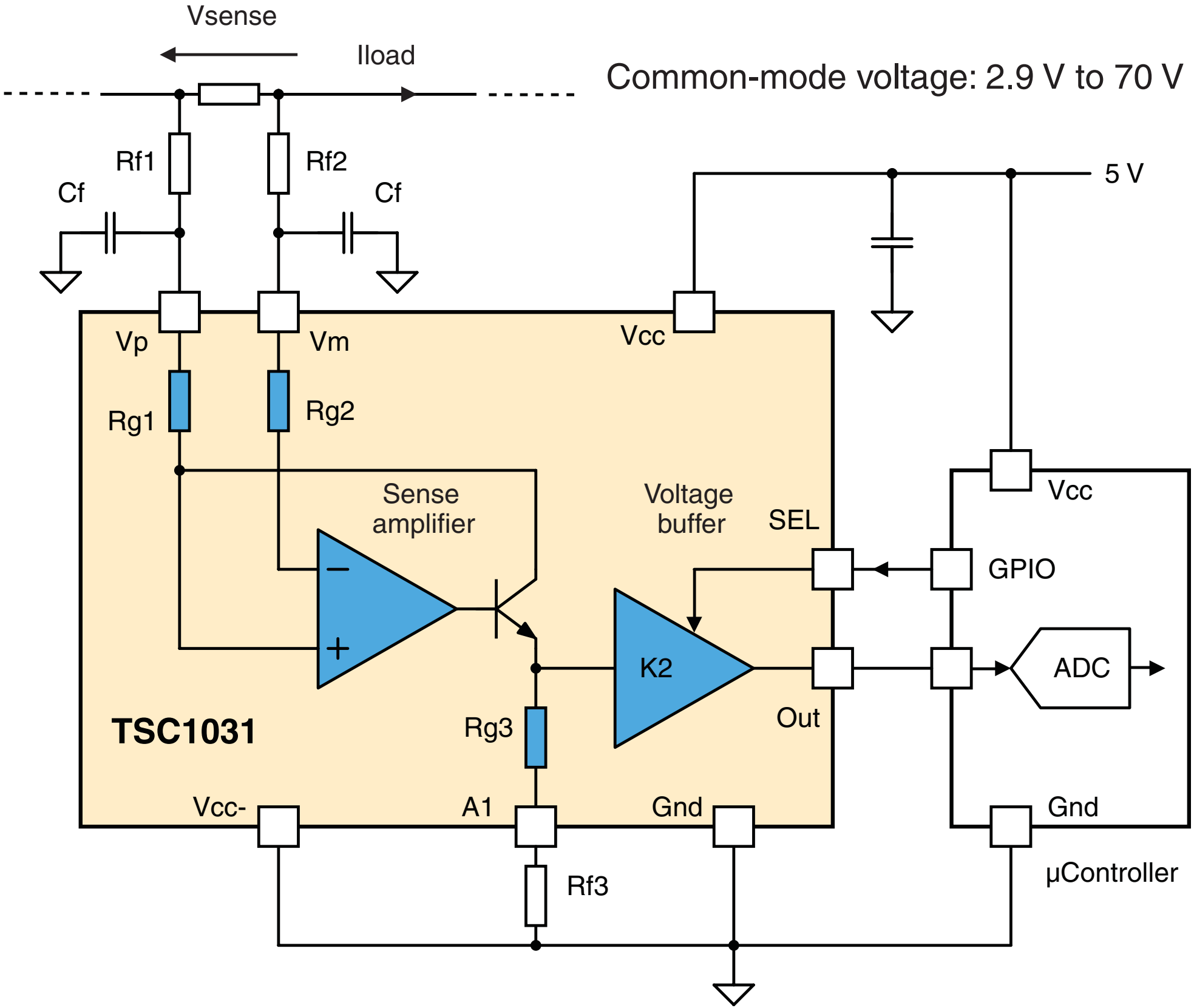
Vsense
Iload
Common-mode voltage: 2.9 V to 70 V
Rf1
Rf2
Cf
Cf
5 V
Vp
Vm
Vcc
Rg1
Rg2
Sense
amplifier
Voltage
buffer
SEL
Vcc
GPIO
K2
ADC
TSC1031
Rg3
Out
Vcc-
A1
Gnd
Gnd
Rf3
µController