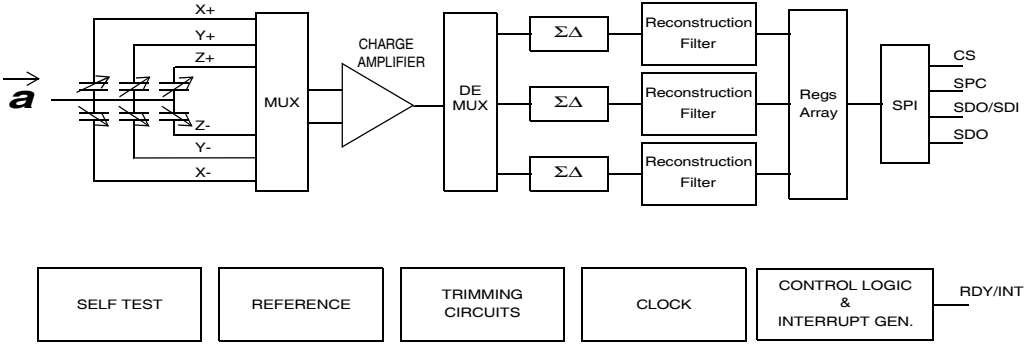
X+
Y+
Z+
Z-
Y-
X-
a
MUX
CHARGE AMPLIFIER
DE MUX
ΣΔ
ΣΔ
ΣΔ
Reconstruction Filter
Reconstruction Filter
Reconstruction Filter
Regs Array
SPI
CS
SPC
SDO/SDI
SDO
SELF TEST
REFERENCE
TRIMMING CIRCUITS
CLOCK
CONTROL LOGIC & INTERRUPT GEN.
RDY/INT