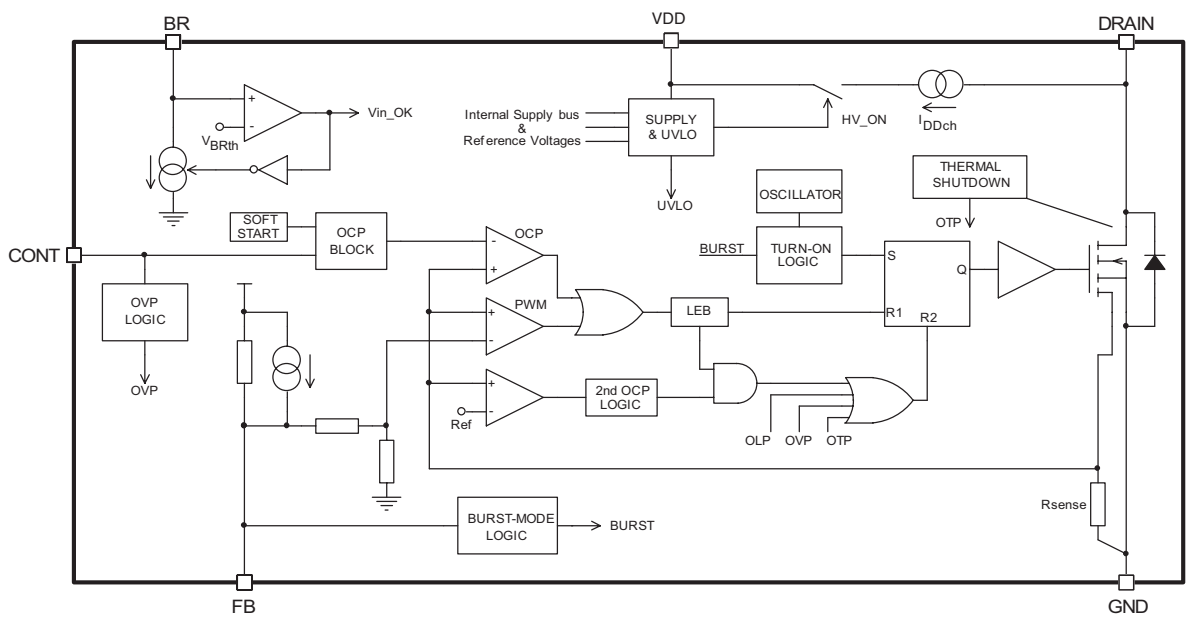
BR
VDD
DRAIN
Vin_OK
VBRth
Internal Supply bus
&
Reference Voltages
SUPPLY
& UVLO
HV_ON
IDDch
UVLO
OSCILLATOR
THERMAL
SHUTDOWN
OTP
SOFT
START
OCP
BLOCK
OCP
BURST
TURN-ON
LOGIC
S
Q
R1
R2
CONT
OVP
LOGIC
OVP
PWM
LEB
2nd OCP
LOGIC
Ref
OLP
OVP
OTP
Rsense
BURST-MODE
LOGIC
BURST
FB
GND