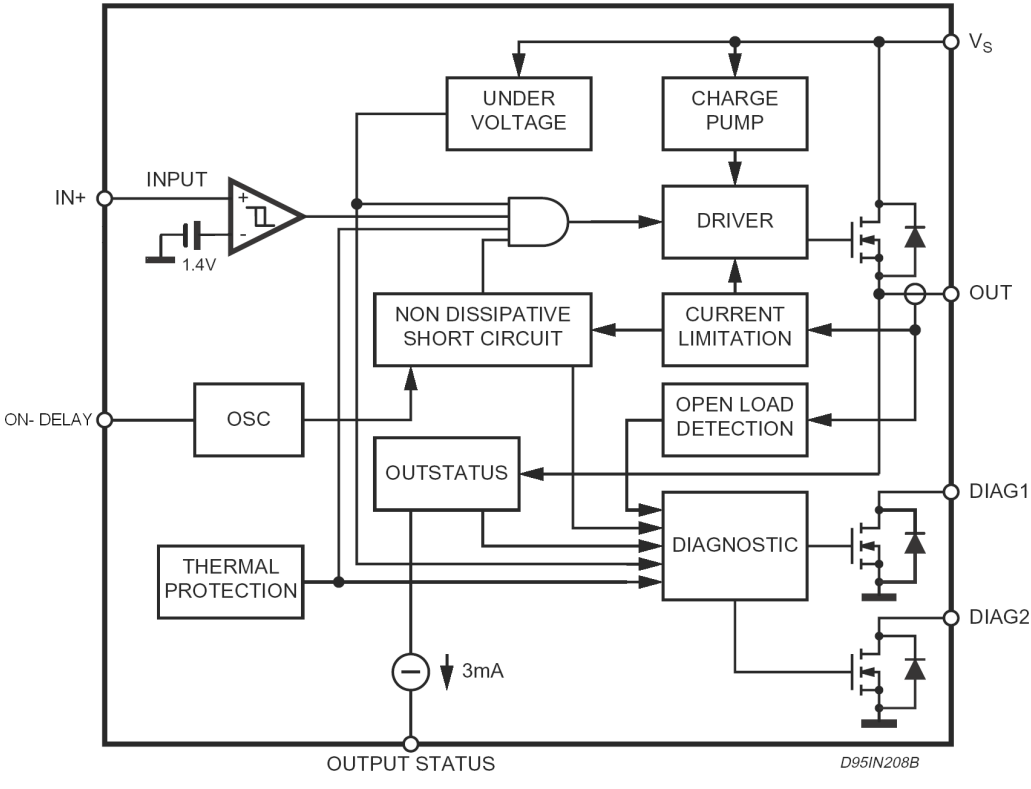
VS
UNDER VOLTAGE
CHARGE PUMP
INPUT
IN+
DRIVER
1.4V
OUT
NON DISSIPATIVE SHORT CIRCUIT
CURRENT LIMITATION
ON- DELAY
OSC
OPEN LOAD DETECTION
OUTSTATUS
DIAG1
DIAGNOSTIC
THERMAL PROTECTION
DIAG2
3mA
OUTPUT STATUS
D95IN208B