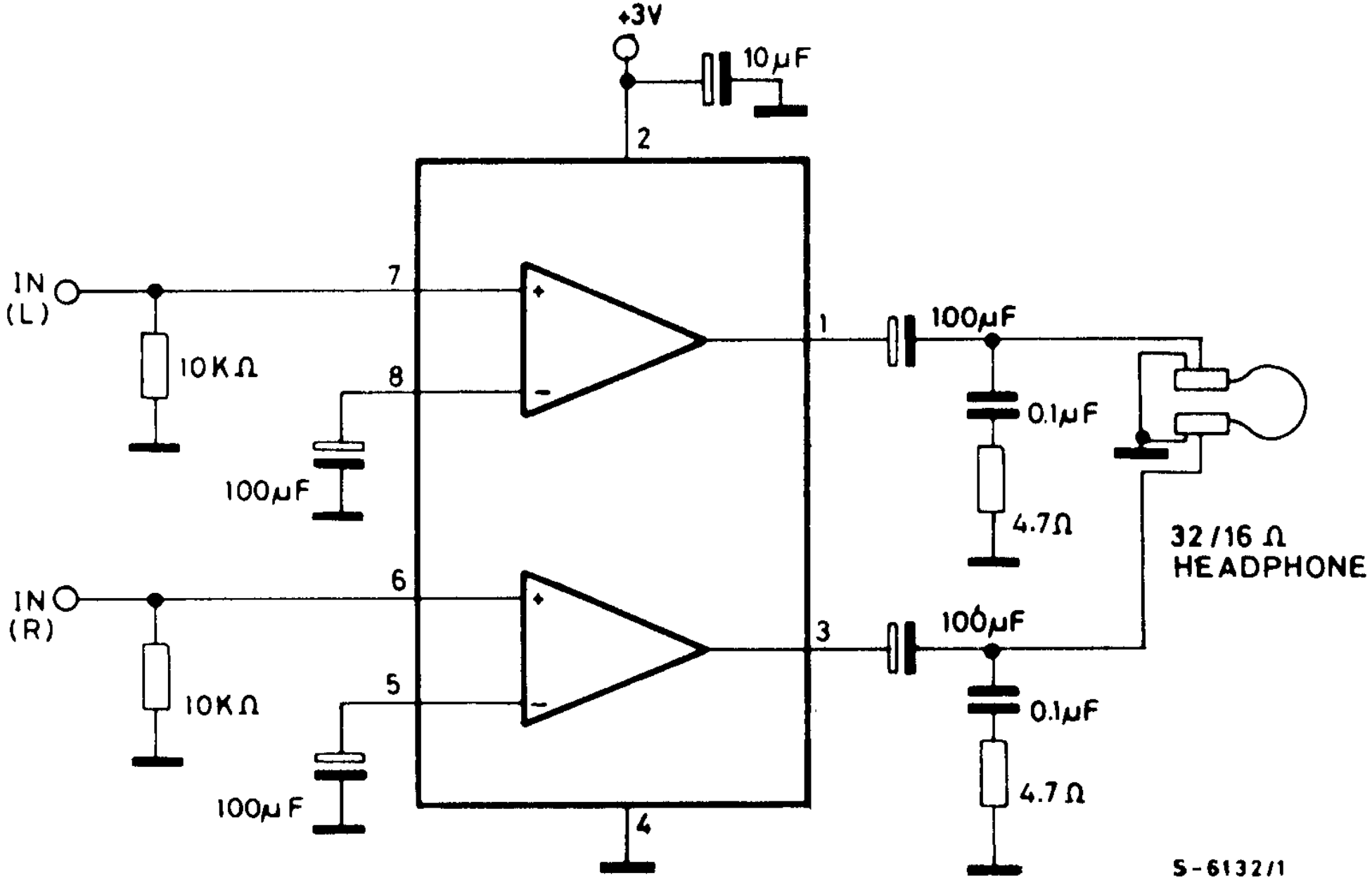
+3V
10μF
2
IN
(L)
7
10KΩ
8
100μF
1
100μF
0.1μF
4.7Ω
32/16 Ω
HEADPHONE
IN
(R)
6
10KΩ
5
100μF
3
100μF
0.1μF
4.7 Ω
4
S-6132/1