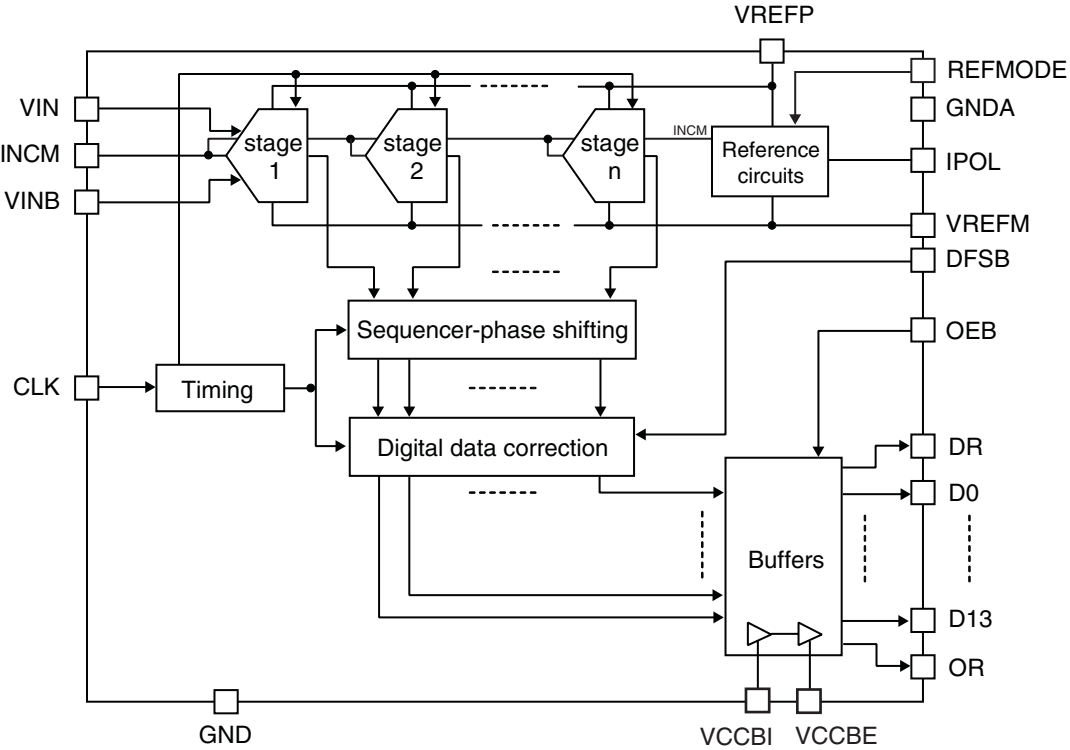
VREFP
REFMODE
GNDA
IPOL
VREFM
DFSB
OEB
DR
D0
D13
OR
VIN
INCM
VINB
CLK
stage 1
stage 2
stage n
INCM
Reference circuits
Sequencer-phase shifting
Timing
Digital data correction
Buffers
GND
VCCBI
VCCBE