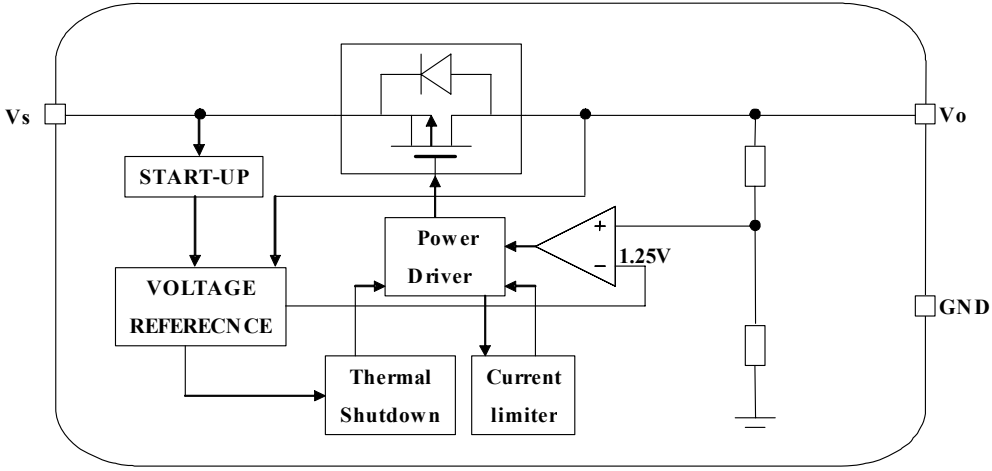
Vs
Vo
START-UP
Power
Driver
+
−
1.25V
VOLTAGE
REFERECNCE
GND
Thermal
Shutdown
Current
limiter