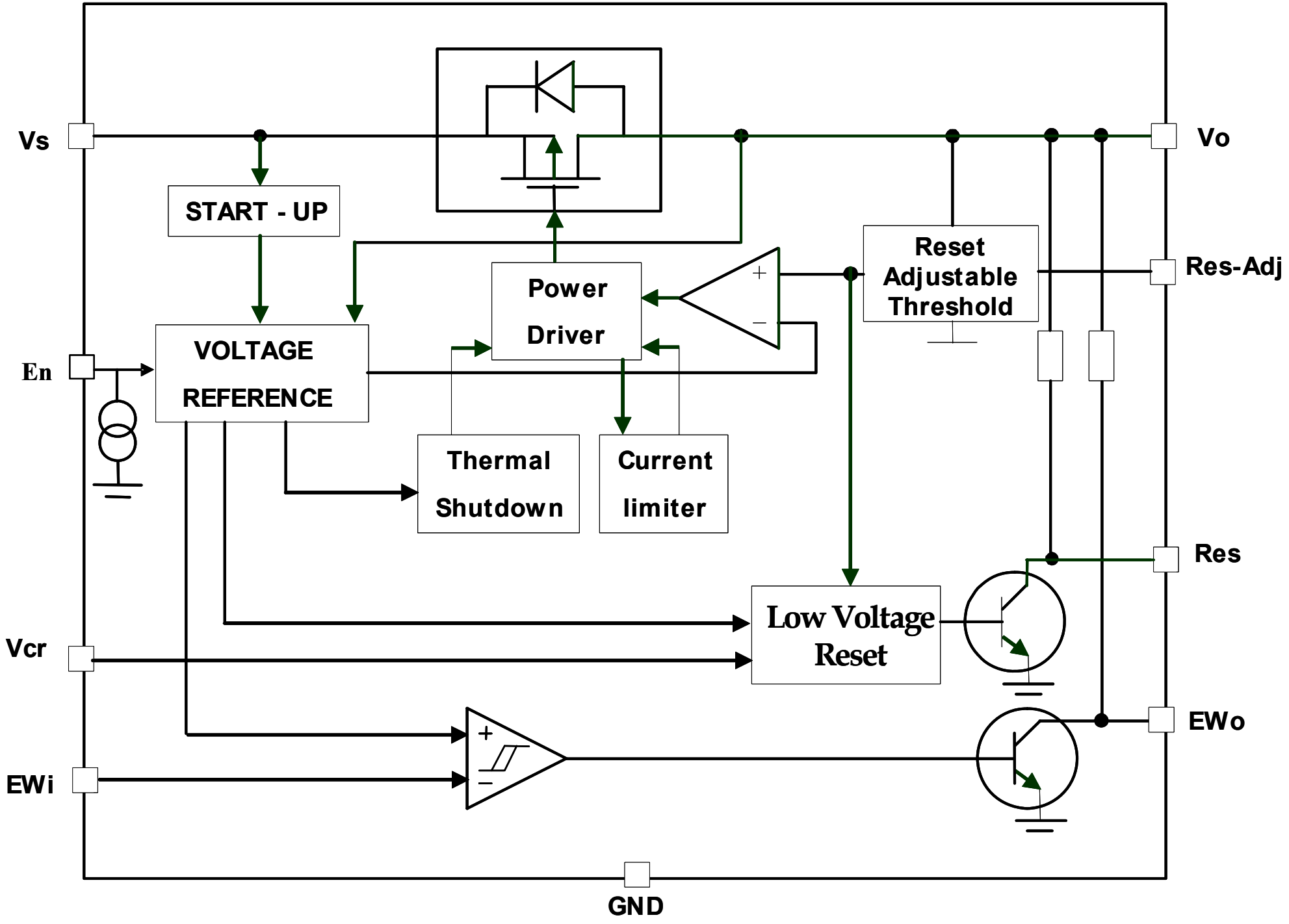
Vs
Vo
START - UP
Reset
Adjustable
Threshold
Res-Adj
Power
Driver
+
−
En
VOLTAGE
REFERENCE
Thermal
Shutdown
Current
limiter
Res
Low Voltage
Reset
Vcr
EWo
+
−
EWi
GND