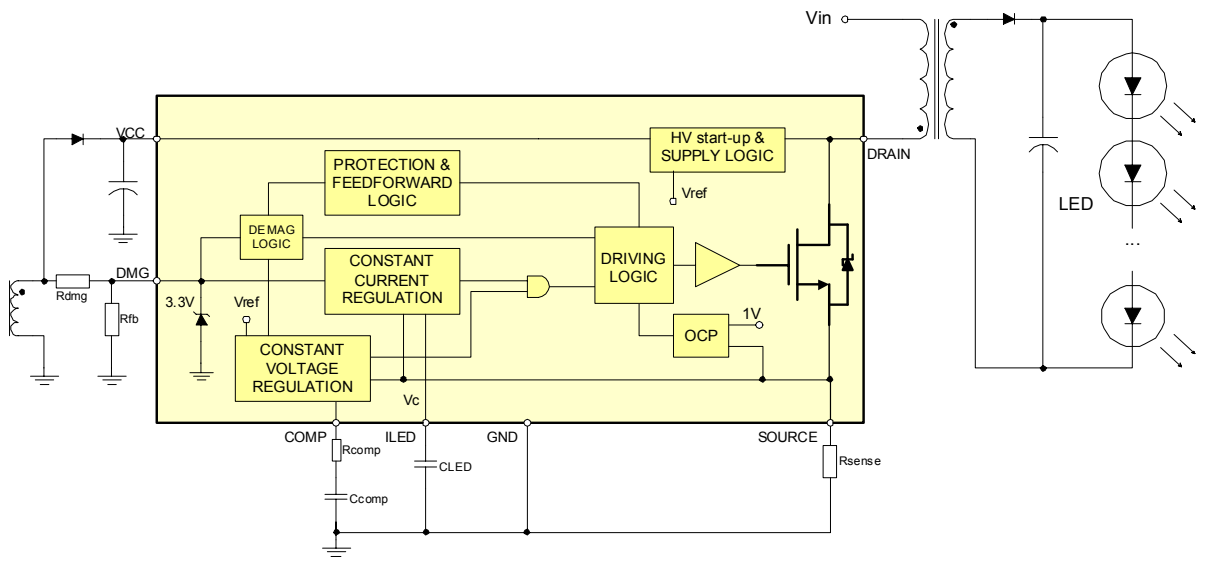
Vin
VCC
DRAIN
HV start-up &
SUPPLY LOGIC
PROTECTION &
FEEDFORWARD
LOGIC
Vref
LED
DEMAG
LOGIC
DMG
CONSTANT
CURRENT
REGULATION
DRIVING
LOGIC
Rdmg
Rfb
3.3V
Vref
1V
OCP
CONSTANT
VOLTAGE
REGULATION
Vc
COMP
ILED
GND
SOURCE
Rcomp
CLED
Ccomp
Rsense