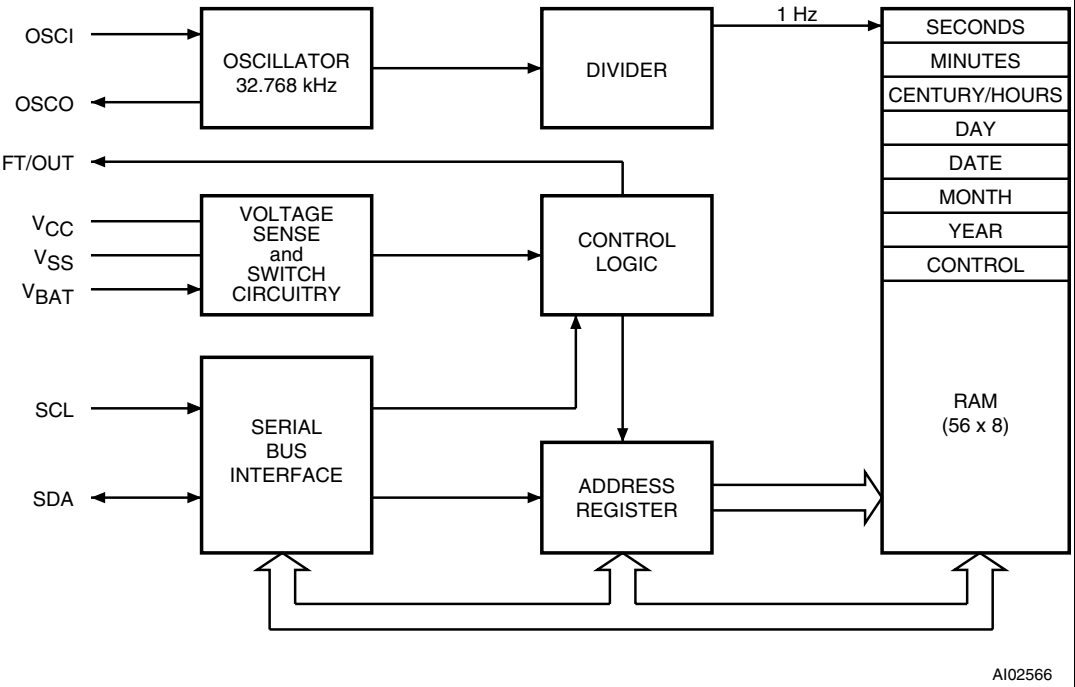
OSCI
OSCO
OSCILLATOR
32.768 kHz
DIVIDER
1 Hz
SECONDS
MINUTES
CENTURY/HOURS
DAY
DATE
MONTH
YEAR
CONTROL
RAM
(56 x 8)
FT/OUT
VCC
VSS
VBAT
VOLTAGE
SENSE
and
SWITCH
CIRCUITRY
CONTROL
LOGIC
SCL
SDA
SERIAL
BUS
INTERFACE
ADDRESS
REGISTER
AI02566