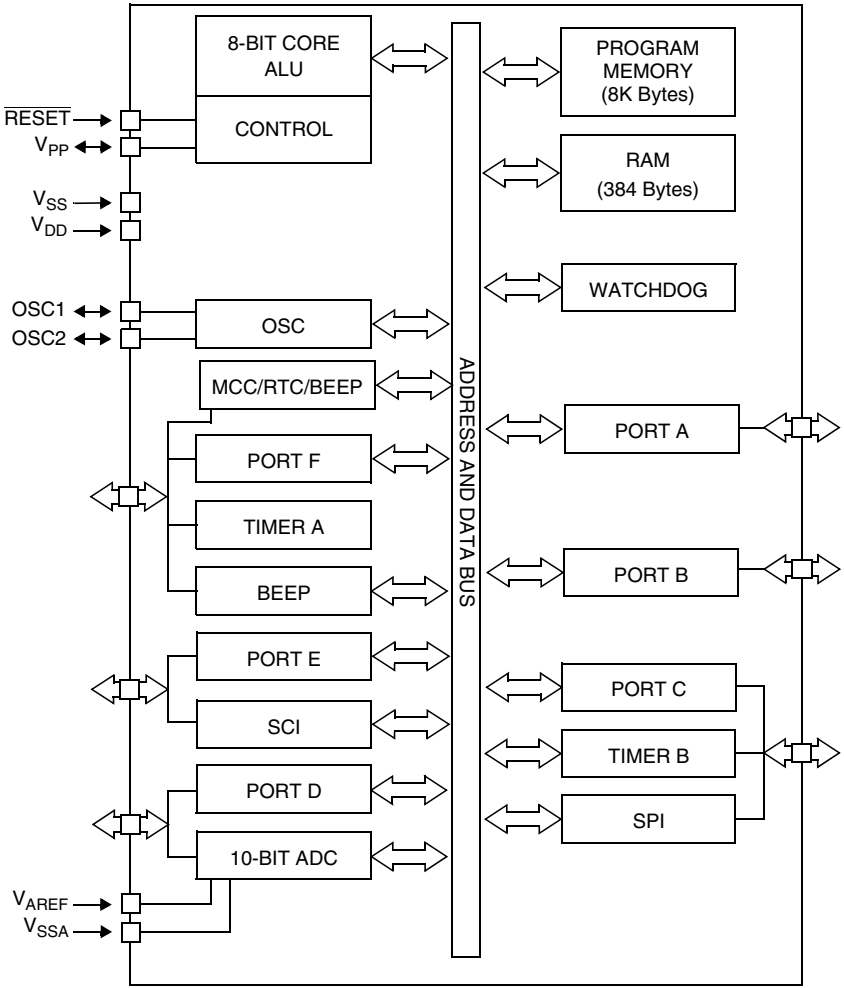
8-BIT CORE ALU
CONTROL
RESET
VPP
VSS
VDD
OSC1
OSC2
OSC
MCC/RTC/BEEP
PORT F
TIMER A
BEEP
PORT E
SCI
PORT D
10-BIT ADC
VAREF
VSSA
ADDRESS AND DATA BUS
PROGRAM MEMORY (8K Bytes)
RAM (384 Bytes)
WATCHDOG
PORT A
PORT B
PORT C
TIMER B
SPI