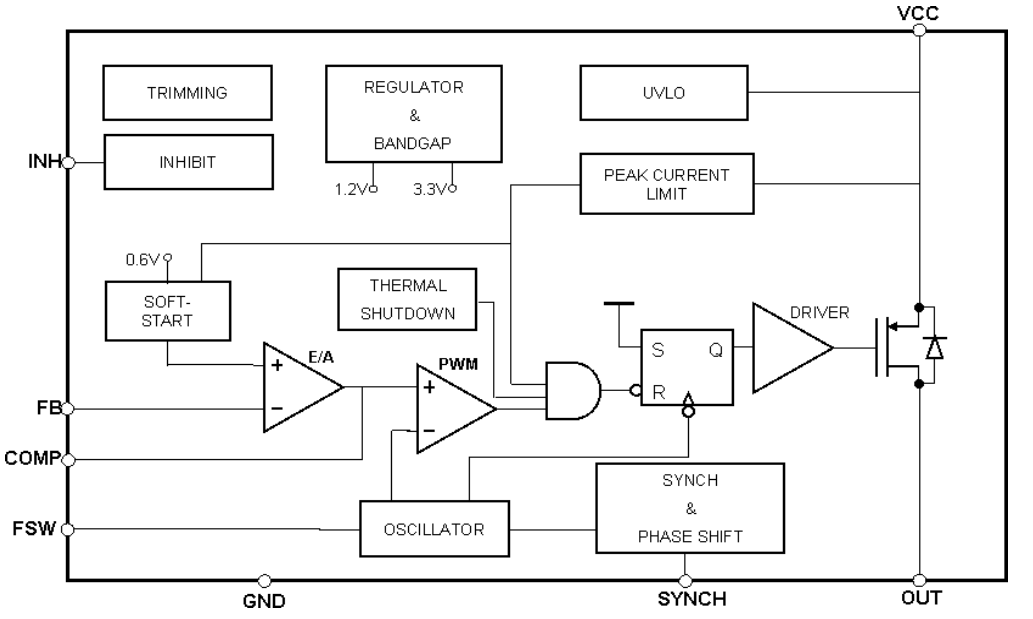
VCC
TRIMMING
REGULATOR
&
BANDGAP
UVLO
INH
INHIBIT
1.2V
3.3V
PEAK CURRENT
LIMIT
0.6V
SOFT-
START
THERMAL
SHUTDOWN
DRIVER
S
Q
R
E/A
PWM
FB
COMP
FSW
OSCILLATOR
SYNCH
&
PHASE SHIFT
GND
SYNCH
OUT