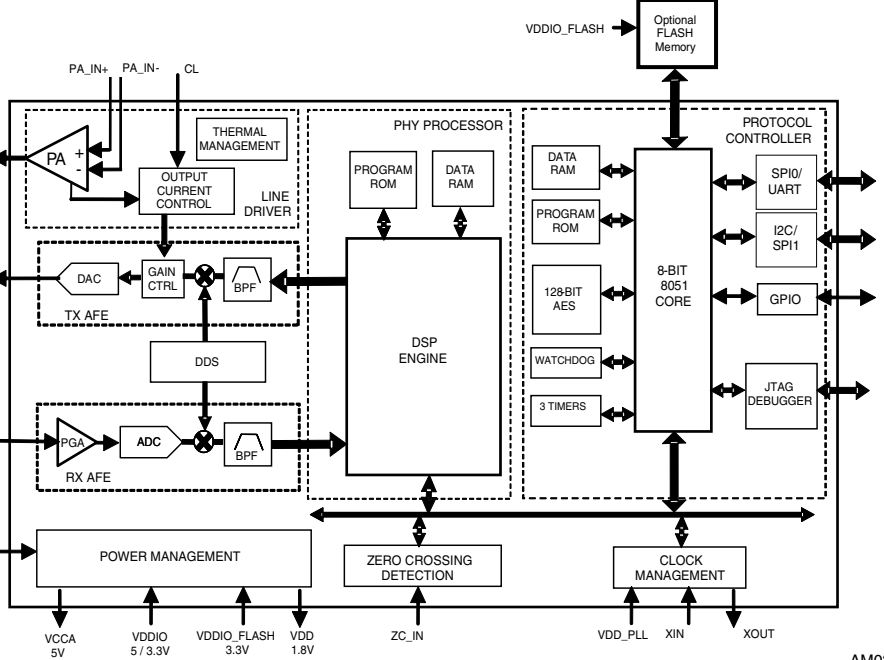
VDDIO_FLASH
Optional FLASH Memory
PA_IN+
PA_IN-
CL
PA_OUT
PA
+
-
THERMAL MANAGEMENT
OUTPUT CURRENT CONTROL
LINE DRIVER
PHY PROCESSOR
PROGRAM ROM
DATA RAM
PROTOCOL CONTROLLER
DATA RAM
PROGRAM ROM
128-BIT AES
WATCHDOG
3 TIMERS
8-BIT 8051 CORE
SPI0/ UART
I2C/ SPI1
GPIO
JTAG DEBUGGER
Tx_OUT
DAC
GAIN CTRL
BPF
TX AFE
DDS
DSP ENGINE
Rx_IN
PGA
ADC
BPF
RX AFE
VCC 8-18V
POWER MANAGEMENT
ZERO CROSSING DETECTION
CLOCK MANAGEMENT
VCCA 5V
VDDIO 5 / 3.3V
VDDIO_FLASH 3.3V
VDD 1.8V
ZC_IN
VDD_PLL
XIN
XOUT
AM03831V1