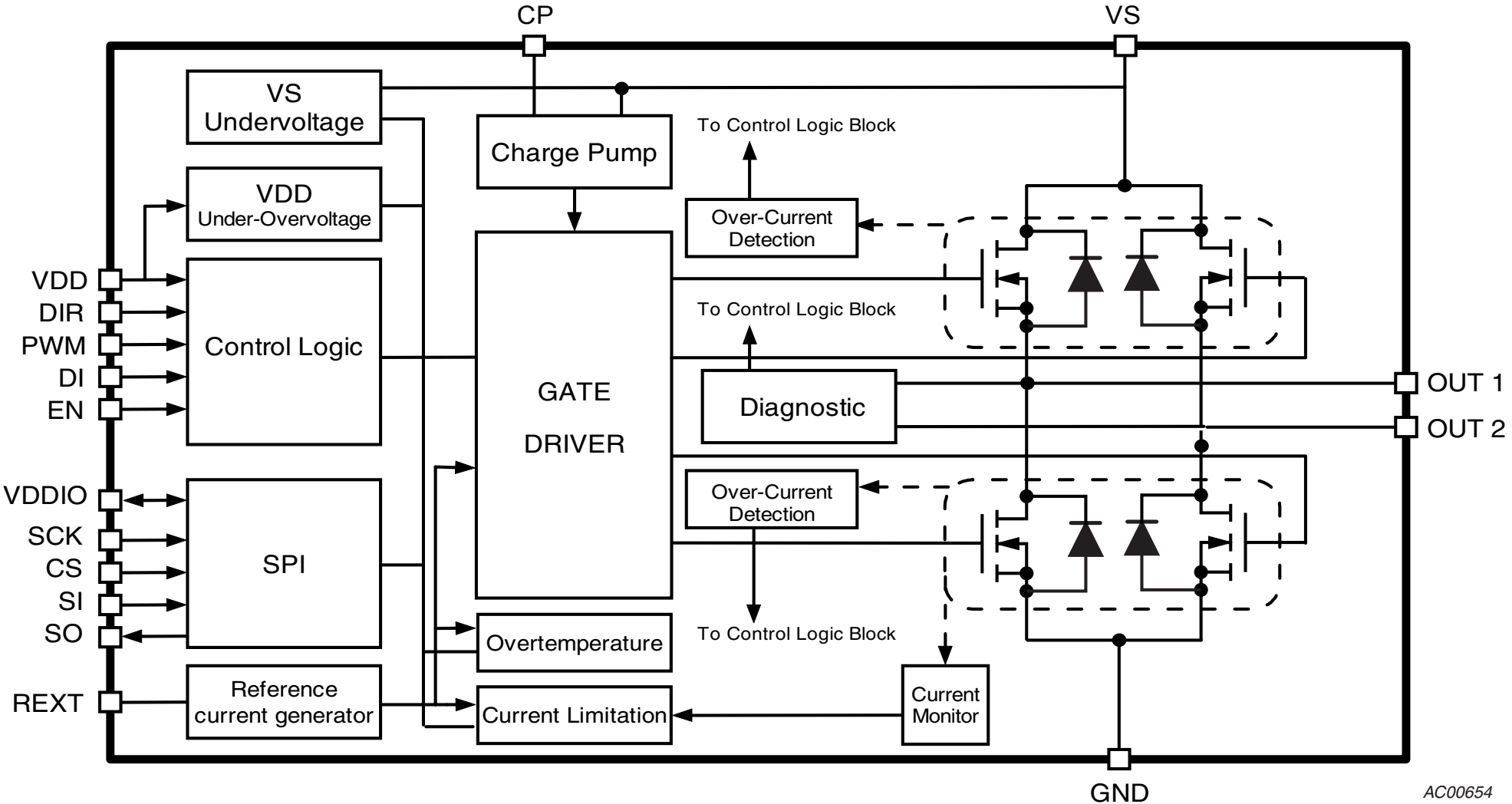
CP
VS
VS Undervoltage
Charge Pump
To Control Logic Block
VDD Under-Overvoltage
Over-Current Detection
VDD
DIR
PWM
DI
EN
Control Logic
To Control Logic Block
GATE DRIVER
Diagnostic
OUT 1
OUT 2
VDDIO
SCK
CS
SI
SO
SPI
Over-Current Detection
Overtemperature
To Control Logic Block
REXT
Reference current generator
Current Limitation
Current Monitor
GND
AC00654