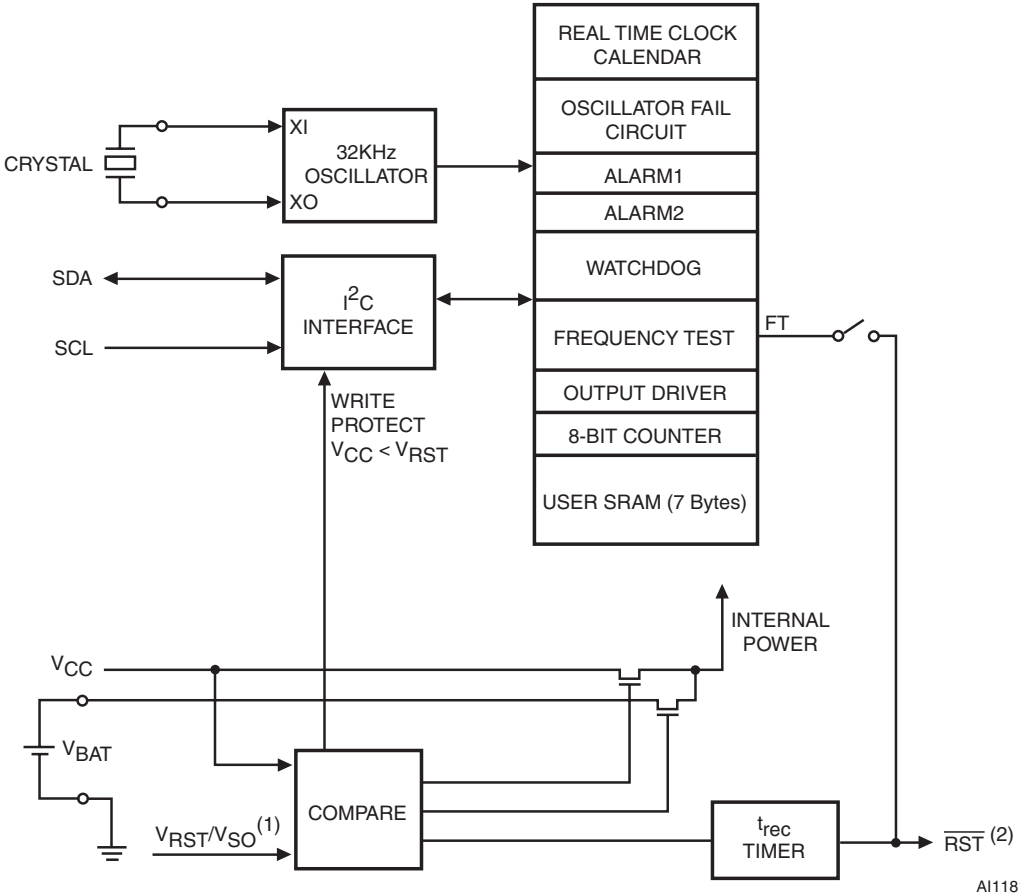
REAL TIME CLOCK CALENDAR
OSCILLATOR FAIL CIRCUIT
ALARM1
ALARM2
WATCHDOG
FREQUENCY TEST
OUTPUT DRIVER
8-BIT COUNTER
USER SRAM (7 Bytes)
CRYSTAL
XI
32KHz OSCILLATOR
XO
SDA
SCL
I2C INTERFACE
FT
WRITE PROTECT VCC < VRST
INTERNAL POWER
VCC
VBAT
COMPARE
VRST/VSO(1)
trec TIMER
RST (2)
AI11812