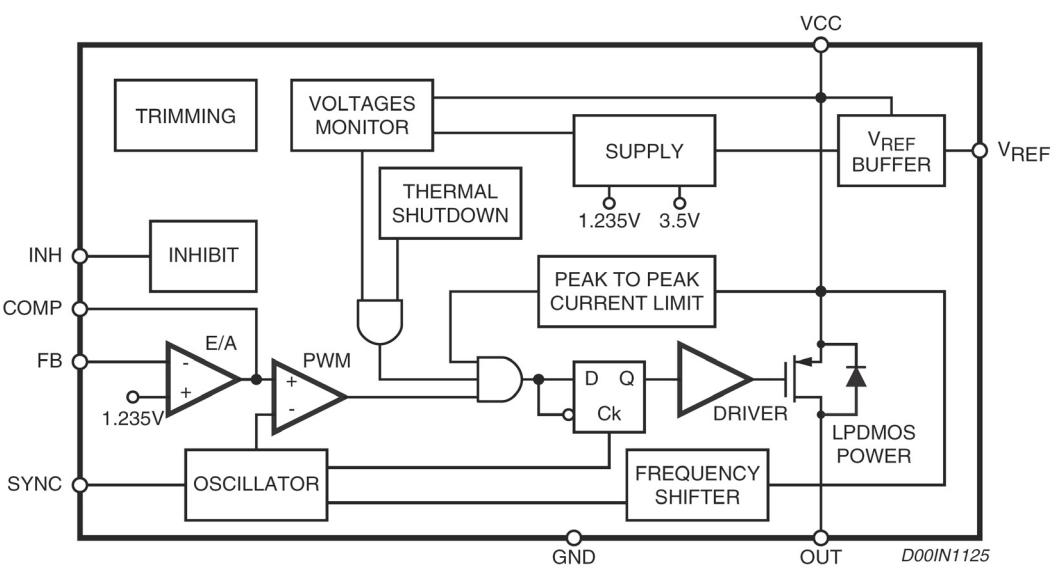
VCC
TRIMMING
VOLTAGES MONITOR
SUPPLY
VREF BUFFER
VREF
THERMAL SHUTDOWN
1.235V
3.5V
INH
INHIBIT
PEAK TO PEAK CURRENT LIMIT
COMP
FB
E/A
PWM
1.235V
D
Q
Ck
DRIVER
LPDMOS POWER
SYNC
OSCILLATOR
FREQUENCY SHIFTER
GND
OUT
D00IN1125