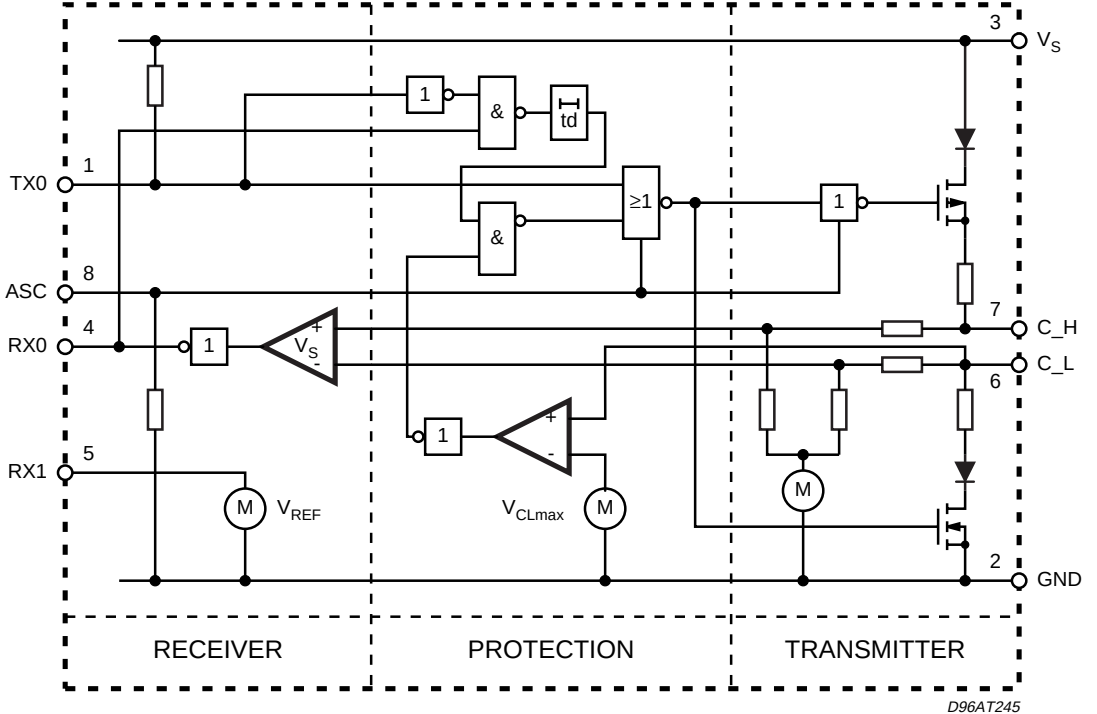
3
VS
1
td
&
TX0
1
≥1
1
&
8
ASC
7
C_H
4
RX0
1
VS
+
-
C_L
6
1
+
-
5
RX1
M
VREF
VCLmax
M
M
2
GND
RECEIVER
PROTECTION
TRANSMITTER
D96AT245