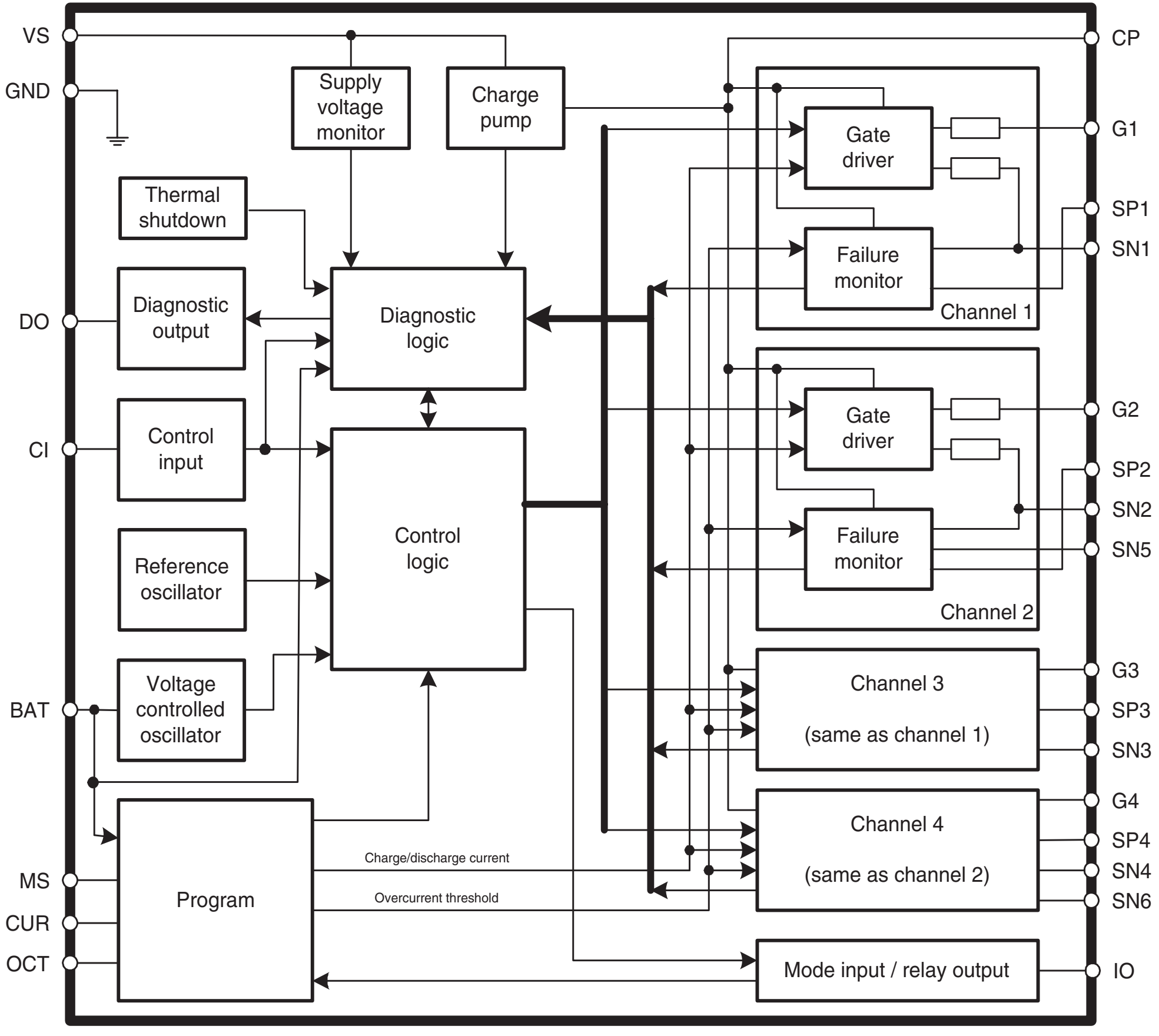
VS
GND
DO
CI
BAT
MS
CUR
OCT
CP
G1
SP1
SN1
G2
SP2
SN2
SN5
G3
SP3
SN3
G4
SP4
SN4
SN6
IO
Supply voltage monitor
Charge pump
Thermal shutdown
Diagnostic output
Diagnostic logic
Control input
Control logic
Reference oscillator
Voltage controlled oscillator
Program
Charge/discharge current
Overcurrent threshold
Gate driver
Failure monitor
Channel 1
Gate driver
Failure monitor
Channel 2
Channel 3
(same as channel 1)
Channel 4
(same as channel 2)
Mode input / relay output