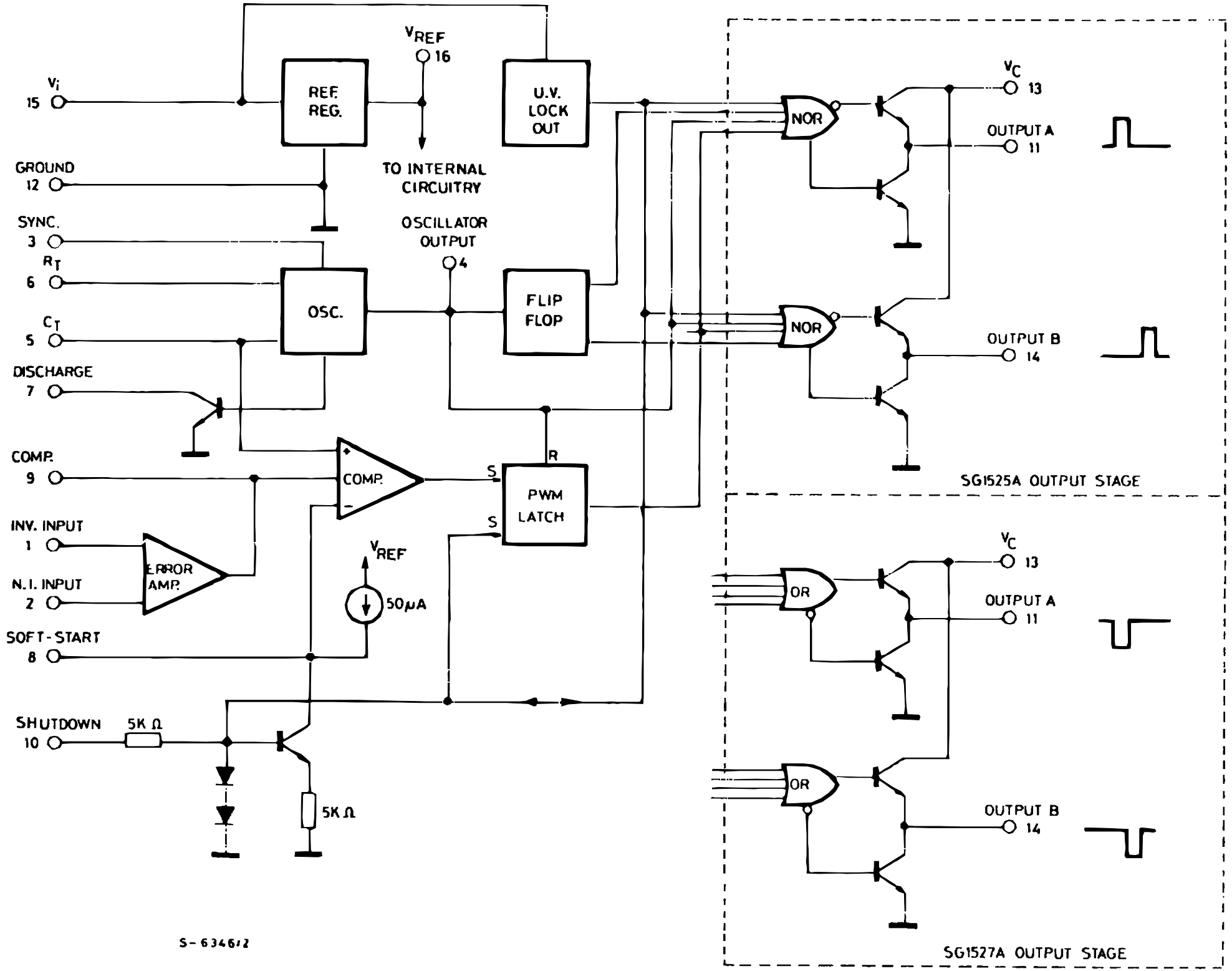
V_i
15
REF. REG.
V_{REF}
16
U.V. LOCK OUT
TO INTERNAL CIRCUITRY
GROUND
12
SYNC.
3
R_T
6
OSCILLATOR OUTPUT
4
OSC.
FLIP FLOP
C_T
5
DISCHARGE
7
COMP.
9
COMP.
S
R
PWM LATCH
S
INV. INPUT
1
ERROR AMP.
N.I. INPUT
2
V_{REF}
50μA
SOFT-START
8
SHUTDOWN
10
5K Ω
5K Ω
S-634612
NOR
NOR
V_C
13
OUTPUT A
11
OUTPUT B
14
SG1525A OUTPUT STAGE
OR
OR
V_C
13
OUTPUT A
11
OUTPUT B
14
SG1527A OUTPUT STAGE