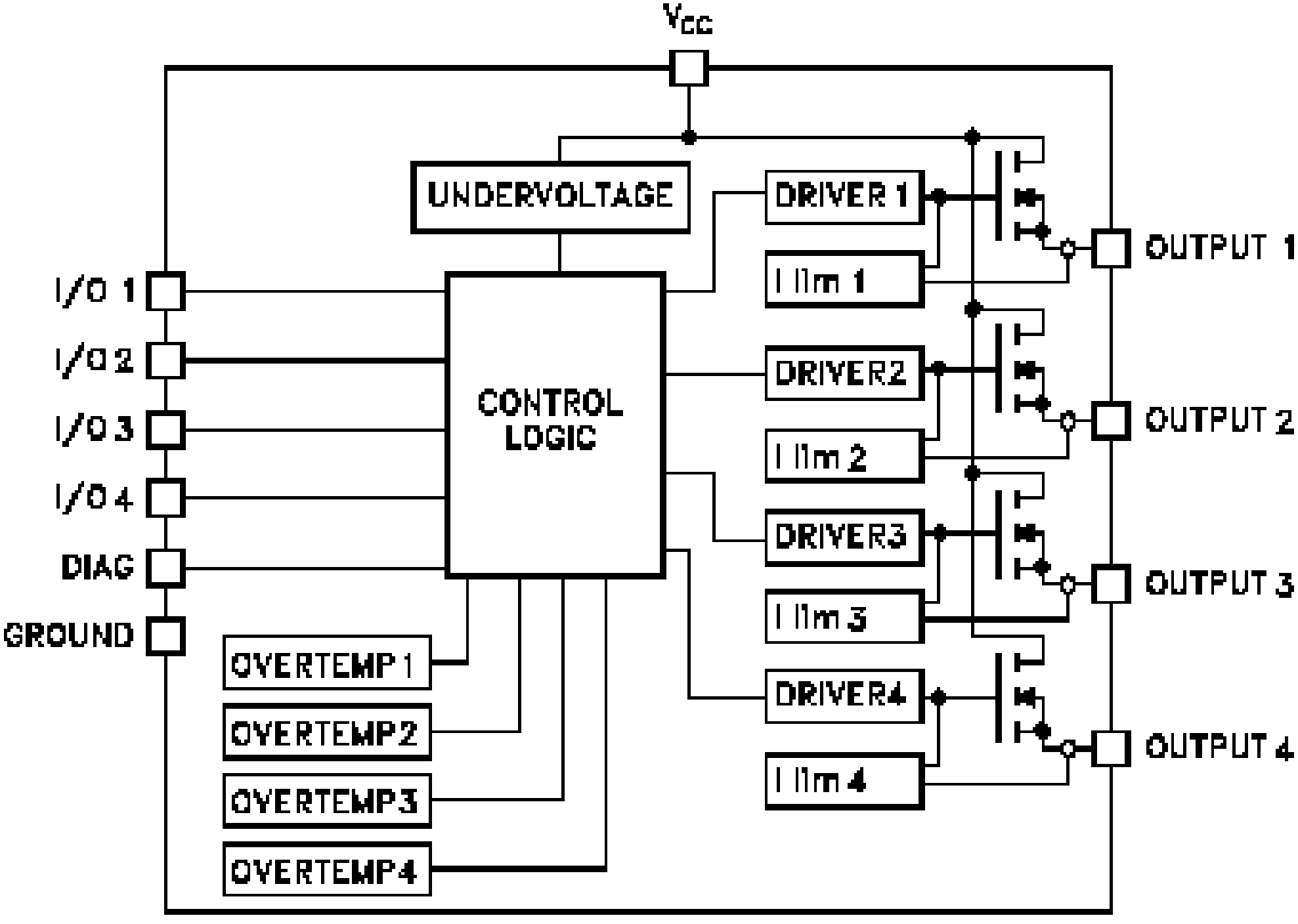
VCC
UNDERVOLTAGE
DRIVER 1
I lim 1
OUTPUT 1
I/O 1
I/O 2
I/O 3
I/O 4
DIAG
GROUND
CONTROL LOGIC
DRIVER2
I lim 2
OUTPUT 2
DRIVER3
I lim 3
OUTPUT 3
DRIVER4
I lim 4
OUTPUT 4
OVERTEMP 1
OVERTEMP2
OVERTEMP3
OVERTEMP4

SC07950