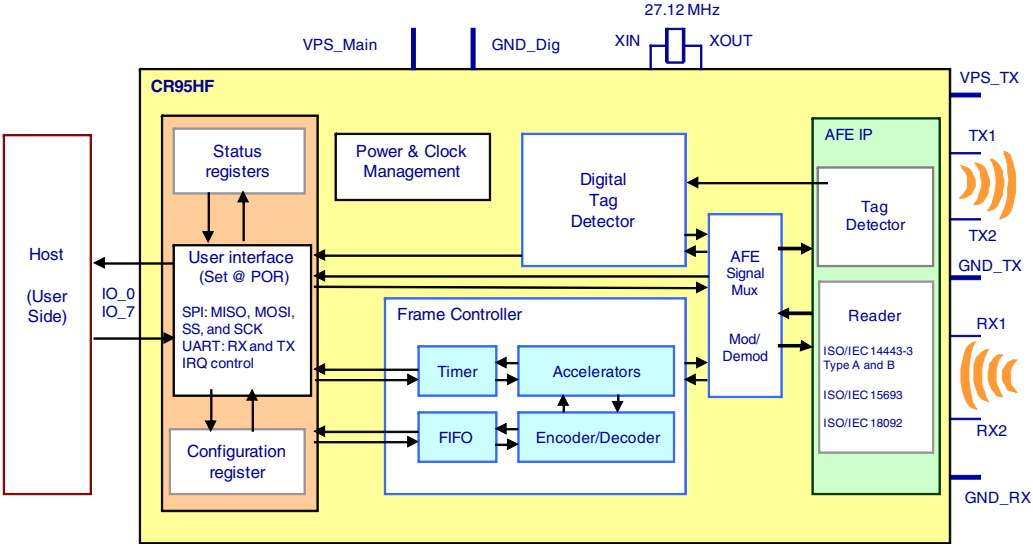
27.12 MHz
VPS_Main
GND_Dig
XIN
XOUT
CR95HF
VPS_TX
Status registers
Power & Clock Management
Digital Tag Detector
AFE IP
TX1
Tag Detector
TX2
Host
(User Side)
IO_0
IO_7
User interface (Set @ POR)
SPI: MISO, MOSI, SS, and SCK
UART: RX and TX
IRQ control
AFE Signal Mux
Mod/ Demod
GND_TX
Frame Controller
Reader
ISO/IEC 14443-3 Type A and B
ISO/IEC 15693
ISO/IEC 18092
RX1
Timer
Accelerators
FIFO
Encoder/Decoder
RX2
Configuration register
GND_RX