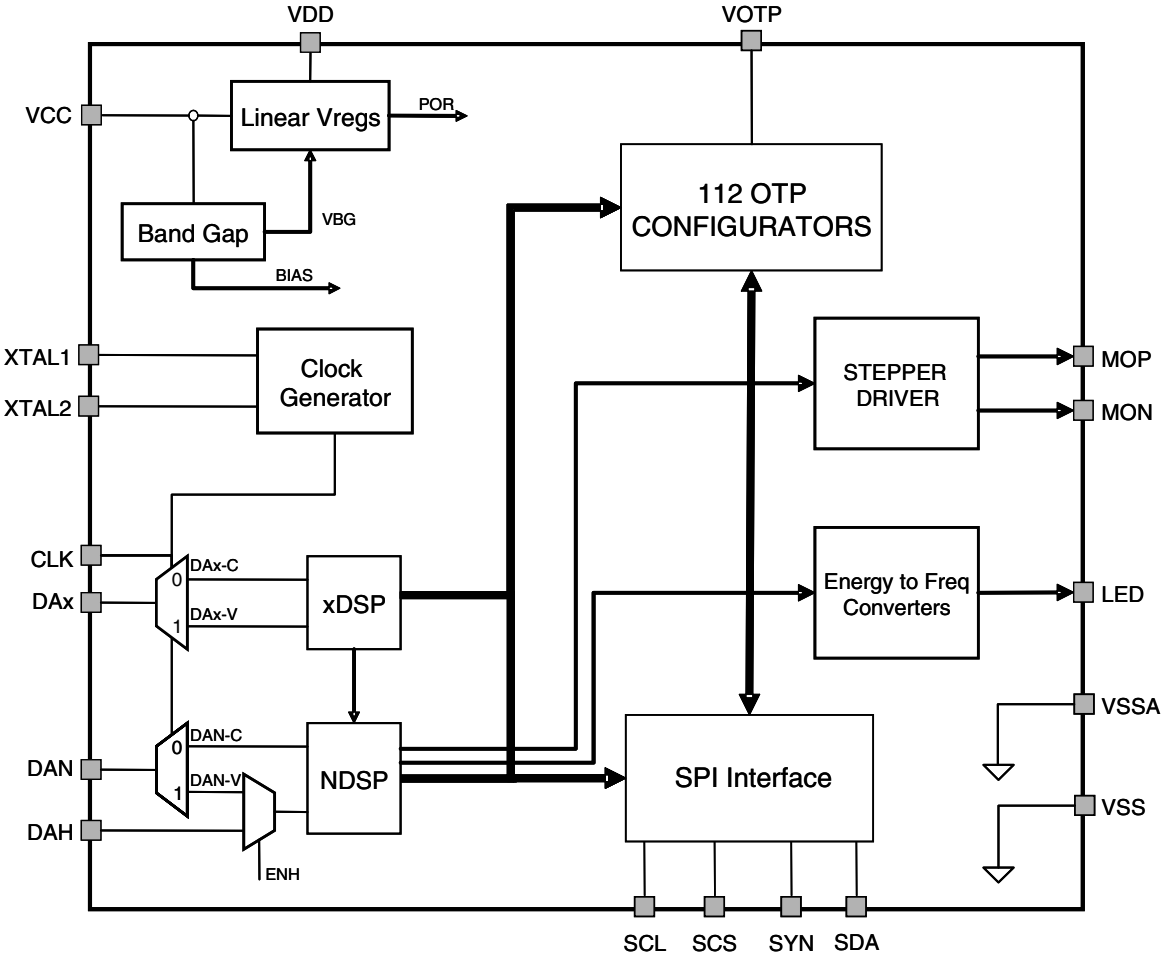
VDD
VOTP
VCC
Linear Vregs
POR
Band Gap
VBG
BIAS
112 OTP
CONFIGURATORS
XTAL1
XTAL2
Clock
Generator
STEPPER
DRIVER
MOP
MON
CLK
DAx
0
1
DAx-C
DAx-V
xDSP
Energy to Freq
Converters
LED
VSSA
DAN
DAH
0
1
DAN-C
DAN-V
NDSP
ENH
SPI Interface
VSS
SCL
SCS
SYN
SDA