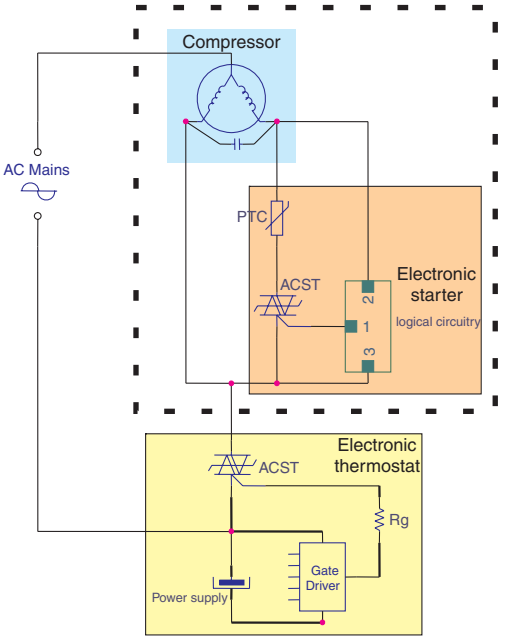

Compressor with integrated e-starter

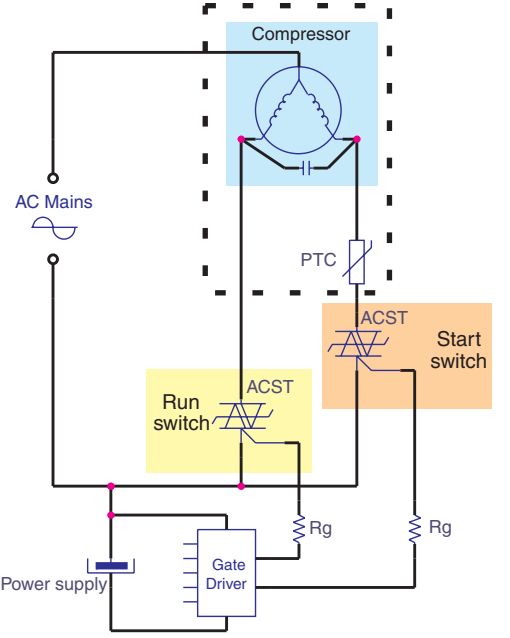

Compressor with external electronic drive