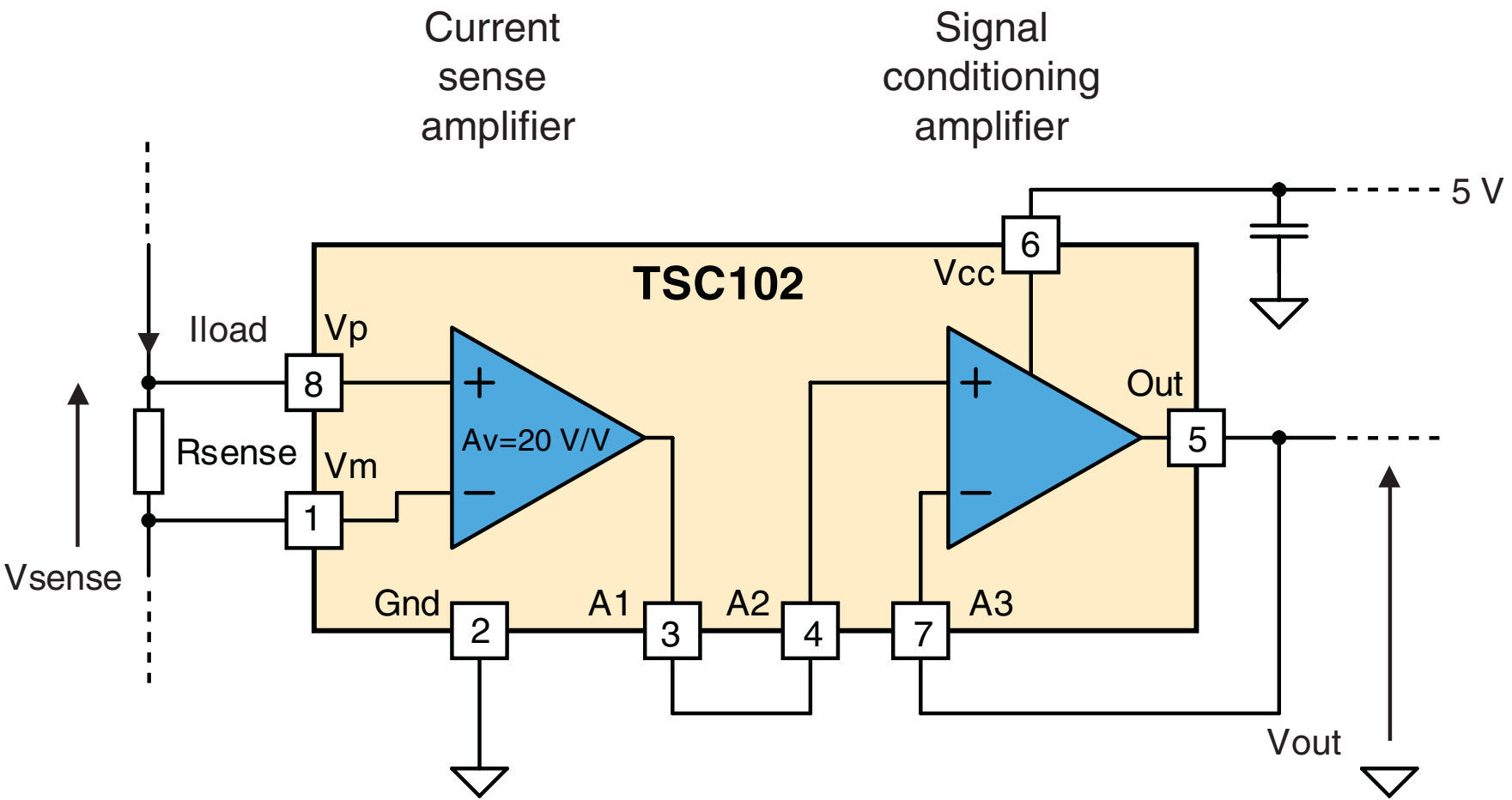
Current sense amplifier
Signal conditioning amplifier
5 V
TSC102
Vcc
6
Iload
Vp
8
Rsense
Vm
1
Vsense
Av=20 V/V
Out
5
Gnd
2
A1
3
A2
4
7
A3
Vout

AM04508