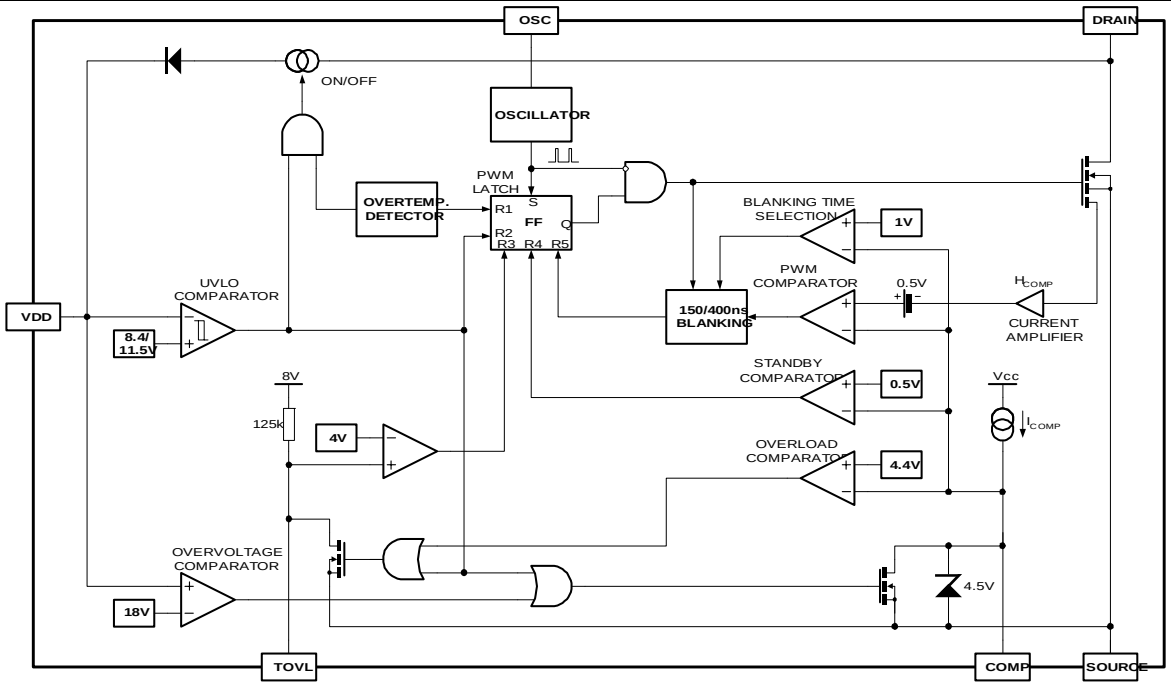
OSC
DRAIN
ON/OFF
OSCILLATOR
PWM
LATCH
S
R1
FF
Q
R2
R3
R4
R5
OVERTEMP.
DETECTOR
BLANKING TIME
SELECTION
1V
PWM
COMPARATOR
0.5V
150/400ns
BLANKING
HCOMP
CURRENT
AMPLIFIER
UVLO
COMPARATOR
VDD
8.4/
11.5V
STANDBY
COMPARATOR
0.5V
8V
Vcc
125k
4V
ICOMP
OVERLOAD
COMPARATOR
4.4V
OVERVOLTAGE
COMPARATOR
4.5V
18V
TOVL
COMP
SOURCE