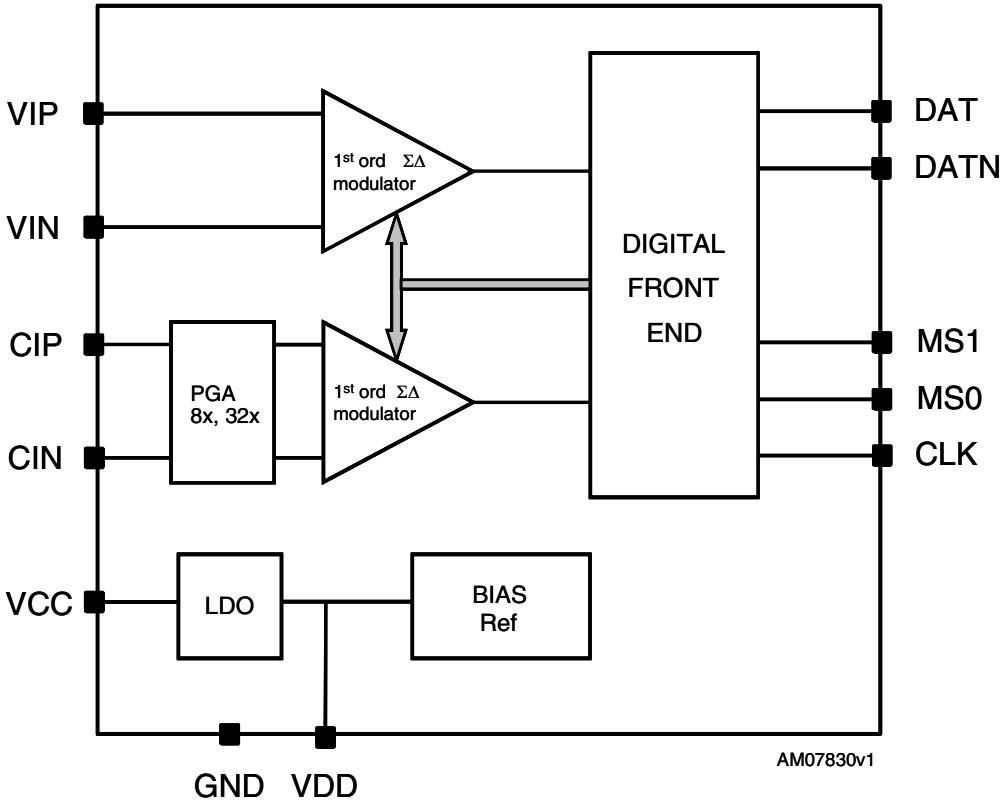
VIP
VIN
CIP
CIN
VCC
1st ord ΣΔ modulator
1st ord ΣΔ modulator
PGA 8x, 32x
DIGITAL FRONT END
LDO
BIAS Ref
DAT
DATN
MS1
MS0
CLK
GND
VDD
AM07830v1