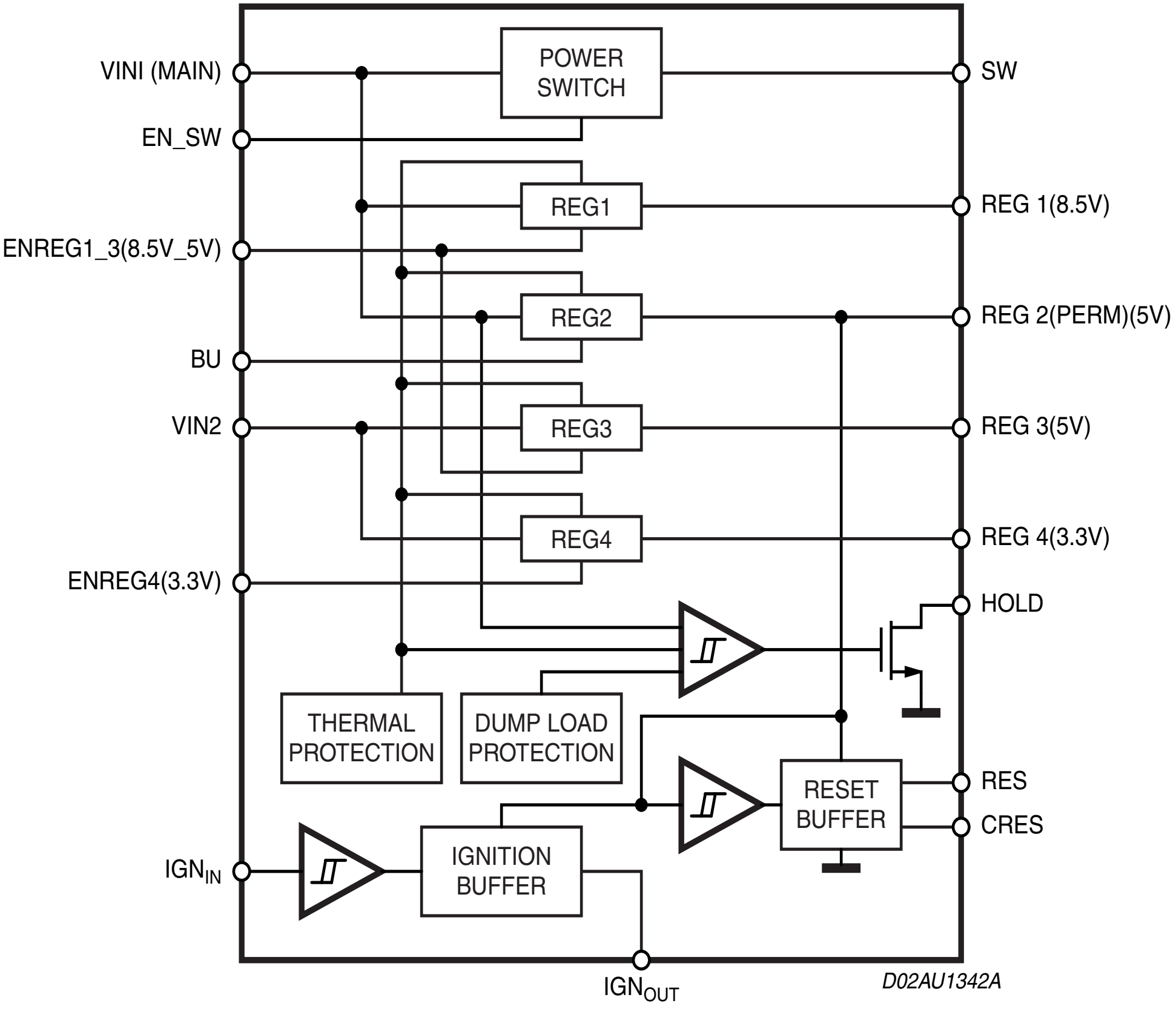
VINI (MAIN)
EN_SW
ENREG1_3(8.5V_5V)
BU
VIN2
ENREG4(3.3V)
IGN_IN
POWER SWITCH
REG1
REG2
REG3
REG4
THERMAL PROTECTION
DUMP LOAD PROTECTION
IGNITION BUFFER
RESET BUFFER
SW
REG 1(8.5V)
REG 2(PERM)(5V)
REG 3(5V)
REG 4(3.3V)
HOLD
RES
CRES
IGN_OUT
D02AU1342A