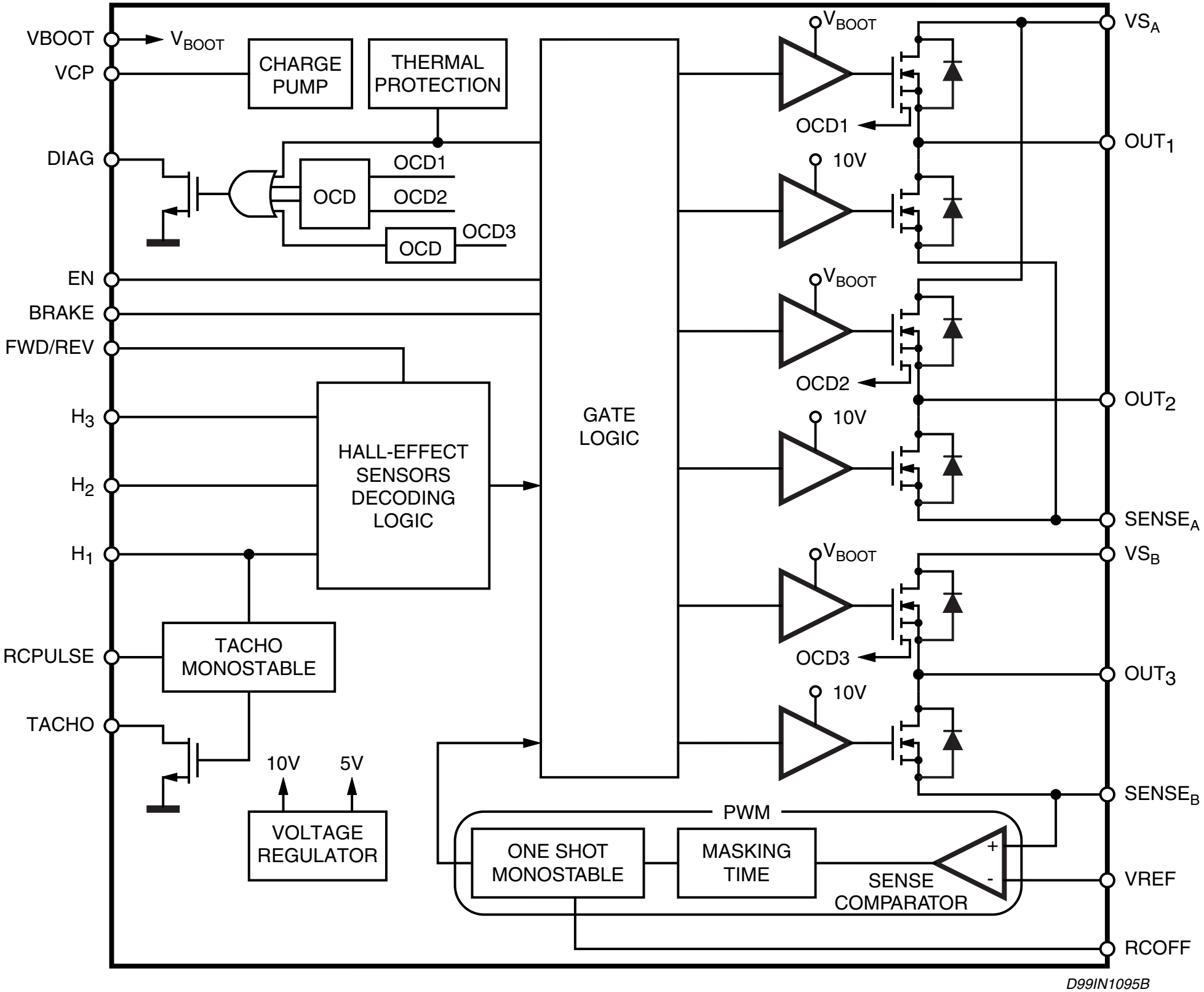
VBOOT
VCP
DIAG
EN
BRAKE
FWD/REV
H3
H2
H1
RCPULSE
TACHO
VBOOT
CHARGE PUMP
THERMAL PROTECTION
OCD
OCD1
OCD2
OCD3
OCD
HALL-EFFECT SENSORS DECODING LOGIC
TACHO MONOSTABLE
10V
5V
VOLTAGE REGULATOR
GATE LOGIC
VBOOT
OCD1
10V
VBOOT
OCD2
10V
VBOOT
OCD3
10V
PWM
ONE SHOT MONOSTABLE
MASKING TIME
SENSE COMPARATOR
+
-
VSA
OUT1
OUT2
SENSEA
VSB
OUT3
SENSEB
VREF
RCOFF
D99IN1095B