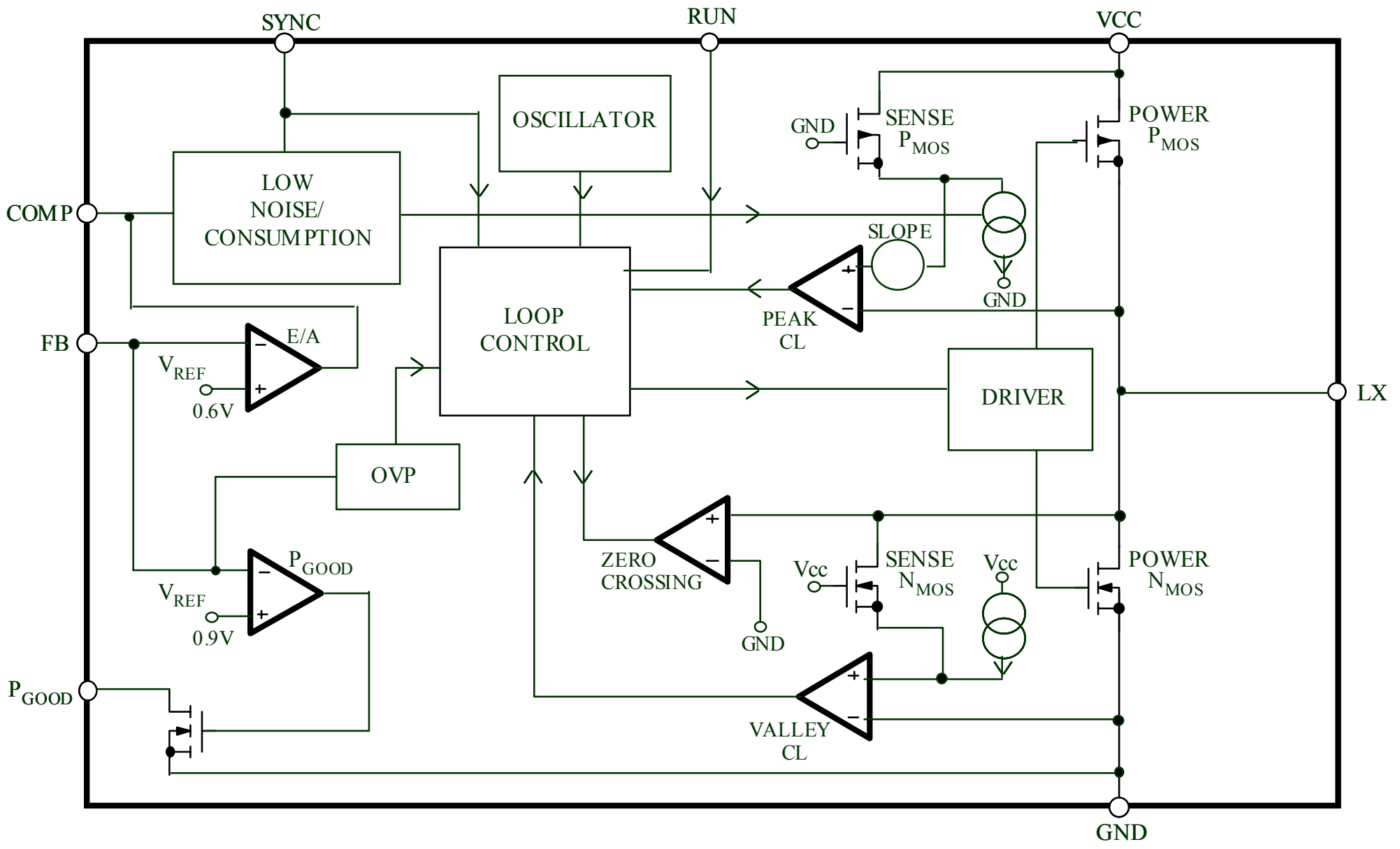
SYNC
RUN
VCC
OSCILLATOR
GND
SENSE
P MOS
POWER
P MOS
LOW
NOISE/
CONSUMPTION
COMP
SLOPE
GND
LOOP
CONTROL
PEAK
CL
FB
E/A
V REF
0.6V
DRIVER
LX
OVP
ZERO
CROSSING
Vcc
SENSE
N MOS
Vcc
POWER
N MOS
P GOOD
V REF
0.9V
GND
P GOOD
VALLEY
CL
GND