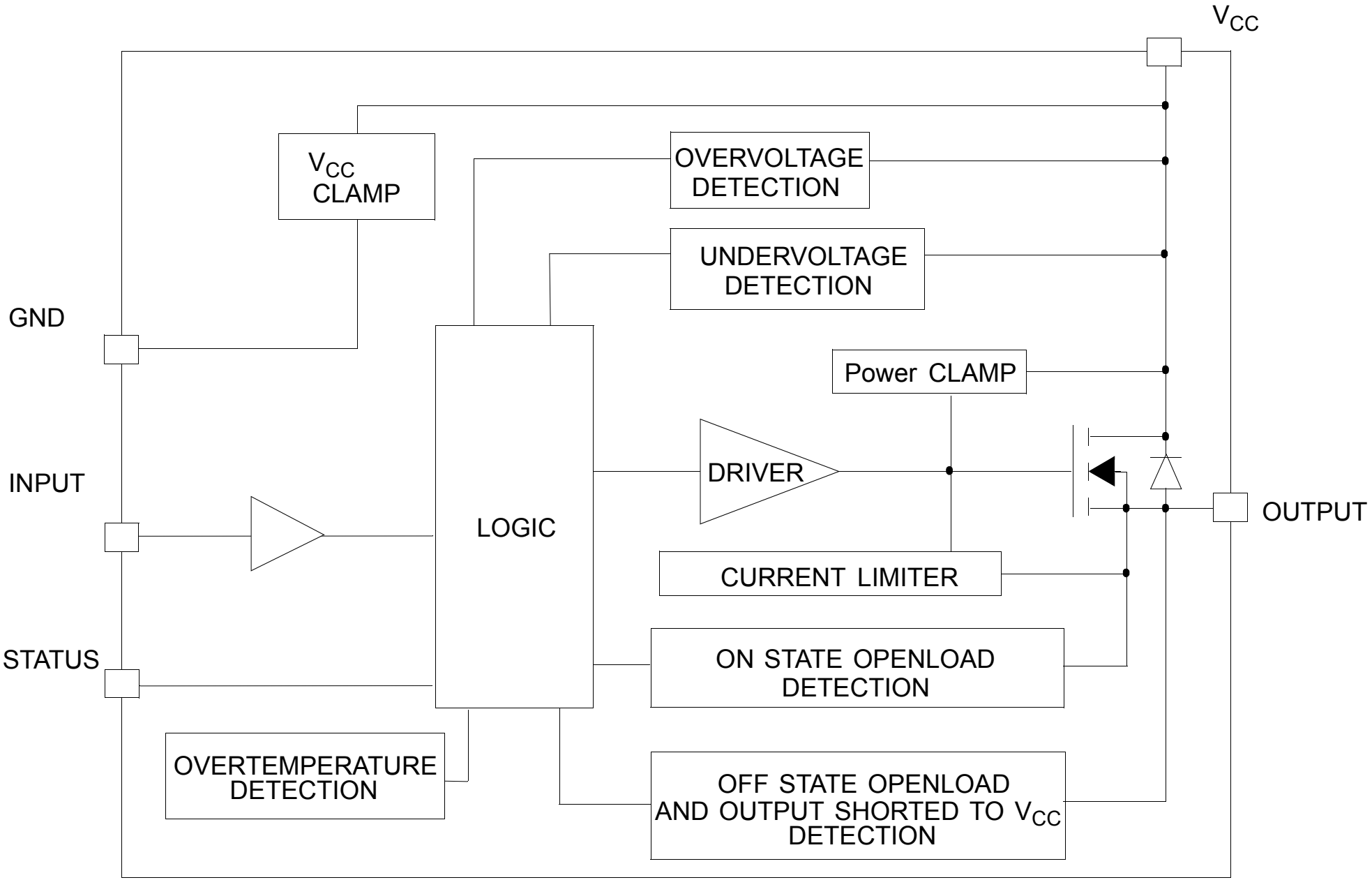
VCC
VCC CLAMP
OVERVOLTAGE DETECTION
UNDERVOLTAGE DETECTION
GND
Power CLAMP
DRIVER
INPUT
LOGIC
OUTPUT
CURRENT LIMITER
STATUS
ON STATE OPENLOAD DETECTION
OVERTEMPERATURE DETECTION
OFF STATE OPENLOAD AND OUTPUT SHORTED TO VCC DETECTION