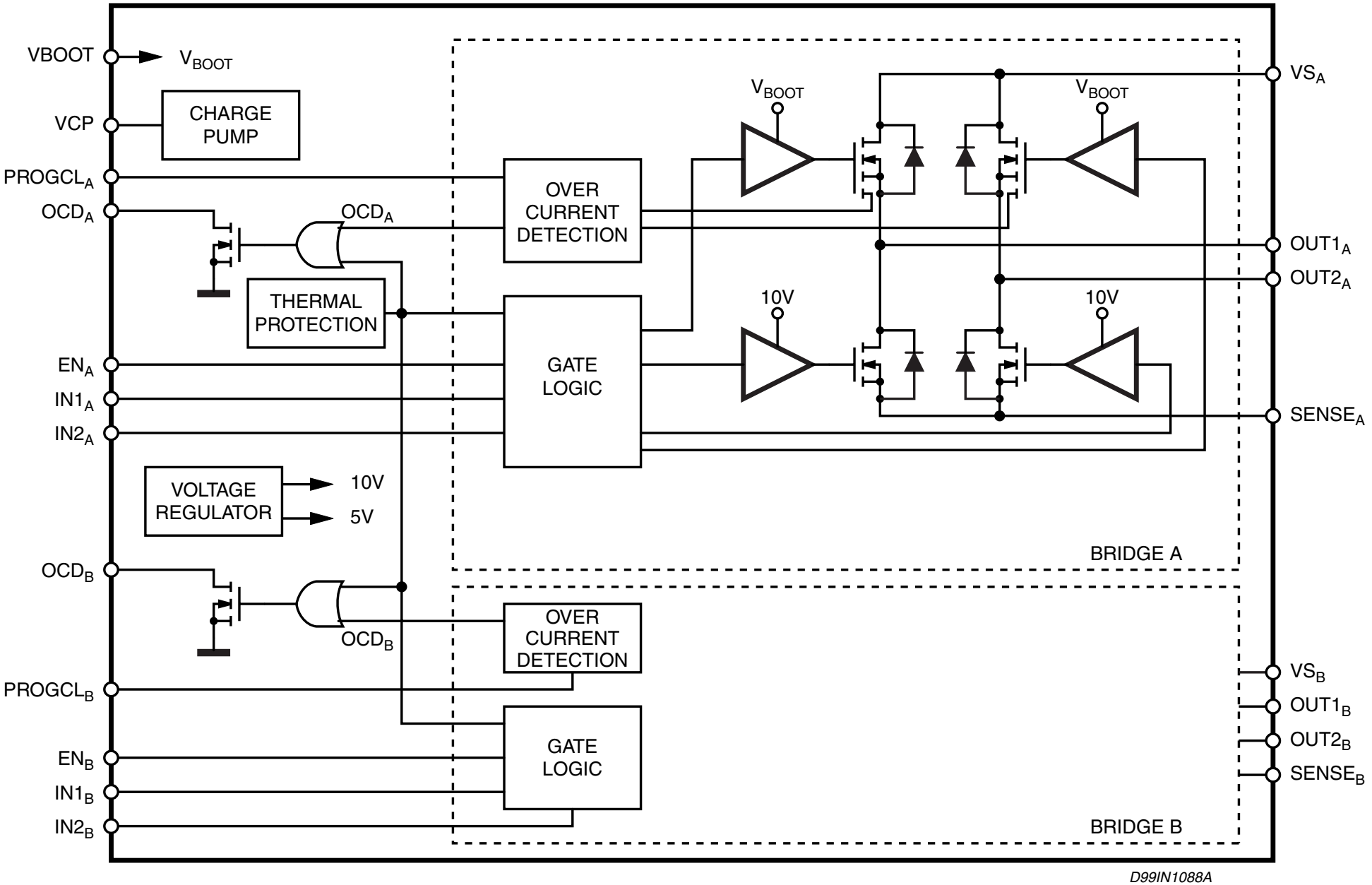
VBOOT
V_{BOOT}
VCP
CHARGE PUMP
$PROGCL_A$
OCD_A
OCD_A
THERMAL PROTECTION
EN_A
$IN1_A$
$IN2_A$
VOLTAGE REGULATOR
10V
5V
OCD_B
OCD_B
$PROGCL_B$
EN_B
$IN1_B$
$IN2_B$
OVER CURRENT DETECTION
GATE LOGIC
V_{BOOT}
V_{BOOT}
10V
10V
VS_A
$OUT1_A$
$OUT2_A$
$SENSE_A$
BRIDGE A
OVER CURRENT DETECTION
GATE LOGIC
VS_B
$OUT1_B$
$OUT2_B$
$SENSE_B$
BRIDGE B
D99IN1088A