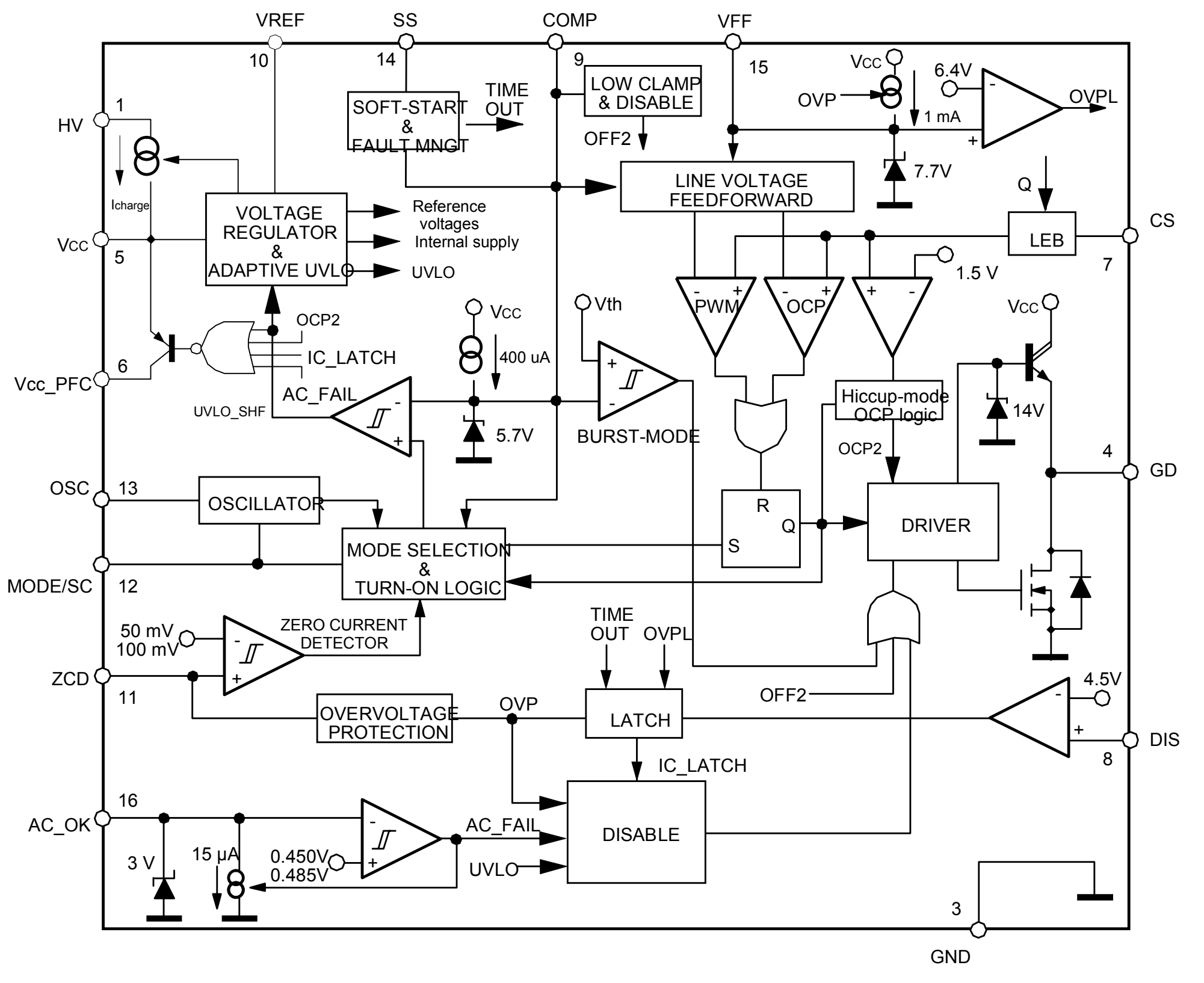
VREF
SS
COMP
VFF
10
14
9
15
LOW CLAMP & DISABLE
SOFT-START & FAULT MNGT
TIME OUT
OFF2
Vcc
6.4V
OVP
1 mA
OVPL
7.7V
HV
1
Icharge
VOLTAGE REGULATOR & ADAPTIVE UVLO
Reference voltages
Internal supply
UVLO
LINE VOLTAGE FEEDFORWARD
Q
LEB
CS
7
Vcc
5
1.5 V
PWM
OCP
Vcc
Vth
OCP2
IC_LATCH
AC_FAIL
UVLO_SHF
400 uA
5.7V
BURST-MODE
Vcc_PFC
6
Hiccup-mode OCP logic
14V
OCP2
4
GD
OSC
13
OSCILLATOR
R
Q
S
DRIVER
MODE SELECTION & TURN-ON LOGIC
MODE/SC
12
50 mV
100 mV
ZERO CURRENT DETECTOR
TIME OUT
OVPL
ZCD
11
OVERVOLTAGE PROTECTION
OVP
LATCH
OFF2
4.5V
DIS
8
IC_LATCH
16
AC_OK
AC_FAIL
DISABLE
3 V
15 µA
0.450V
0.485V
UVLO
3
GND