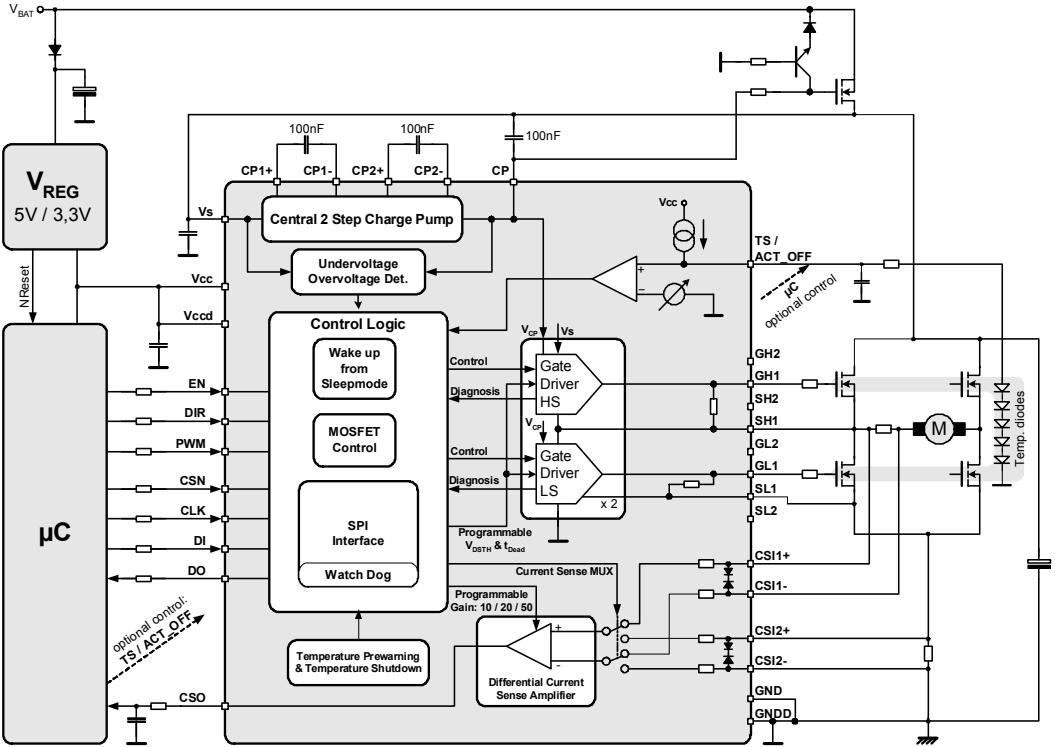
V_BAT
V_REG
5V / 3,3V
NReset
µC
EN
DIR
PWM
CSN
CLK
DI
DO
CSO
optional control:
TS / ACT_OFF
Vs
Vcc
Vccd
100nF
100nF
100nF
CP1+
CP1-
CP2+
CP2-
CP
Central 2 Step Charge Pump
Undervoltage
Overvoltage Det.
Control Logic
Wake up
from
Sleepmode
MOSFET
Control
SPI
Interface
Watch Dog
Temperature Prewarning
& Temperature Shutdown
Control
Diagnosis
Control
Diagnosis
V_CP
Vs
Gate
Driver
HS
Gate
Driver
LS
x 2
Programmable
V_DSTH & t_Dead
Current Sense MUX
Programmable
Gain: 10 / 20 / 50
Differential Current
Sense Amplifier
Vcc
TS /
ACT_OFF
µC
optional control
GH2
GH1
SH2
SH1
GL2
GL1
SL1
SL2
CSI1+
CSI1-
CSI2+
CSI2-
GND
GNDD
M
Temp. diodes