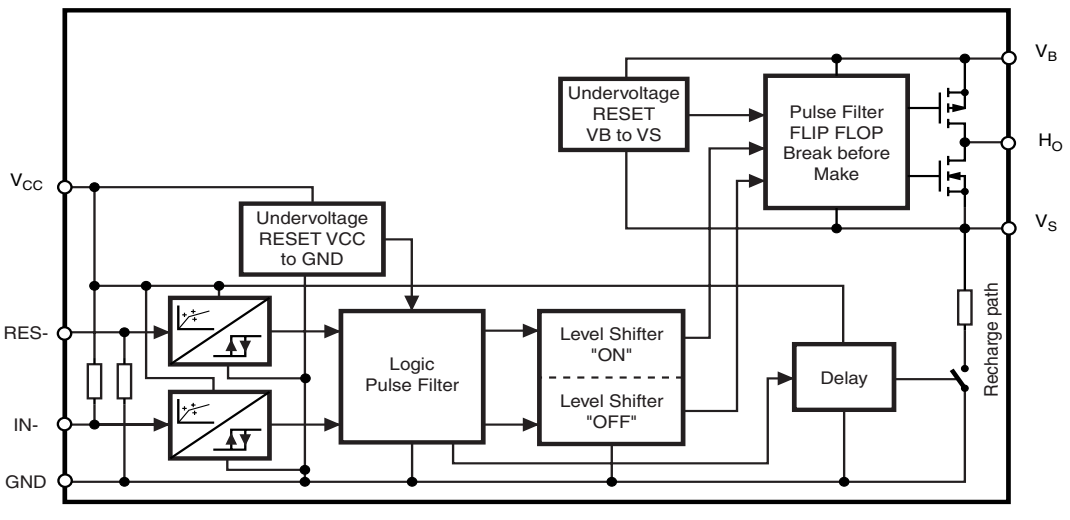
VB
HO
VS
VCC
RES-
IN-
GND
Undervoltage RESET VB to VS
Pulse Filter FLIP FLOP Break before Make
Undervoltage RESET VCC to GND
Logic Pulse Filter
Level Shifter "ON"
Level Shifter "OFF"
Delay
Recharge path