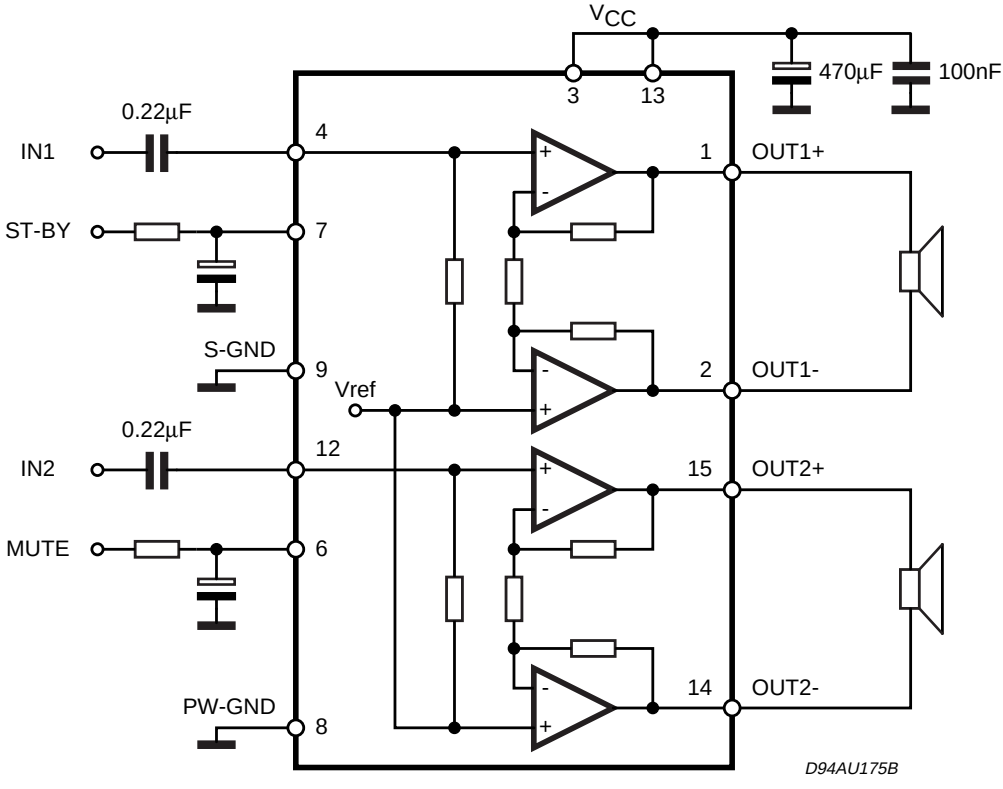
VCC
3
13
470µF
100nF
0.22µF
IN1
4
1
OUT1+
ST-BY
7
S-GND
9
Vref
2
OUT1-
0.22µF
IN2
12
15
OUT2+
MUTE
6
14
OUT2-
PW-GND
8
D94AU175B