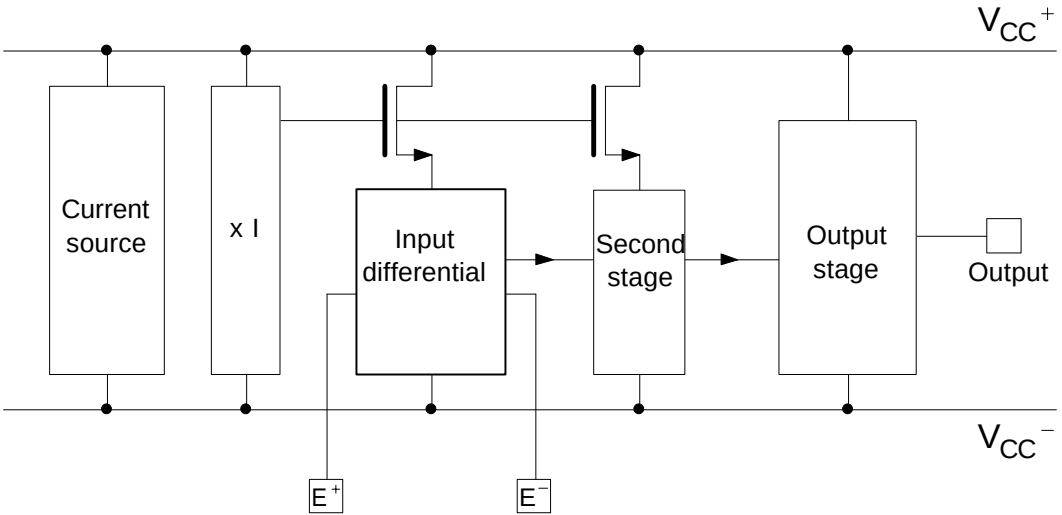
V_{CC}^{+}
Current source
x I
Input differential
Second stage
Output stage
Output
V_{CC}^{-}
E^{+}
E^{-}