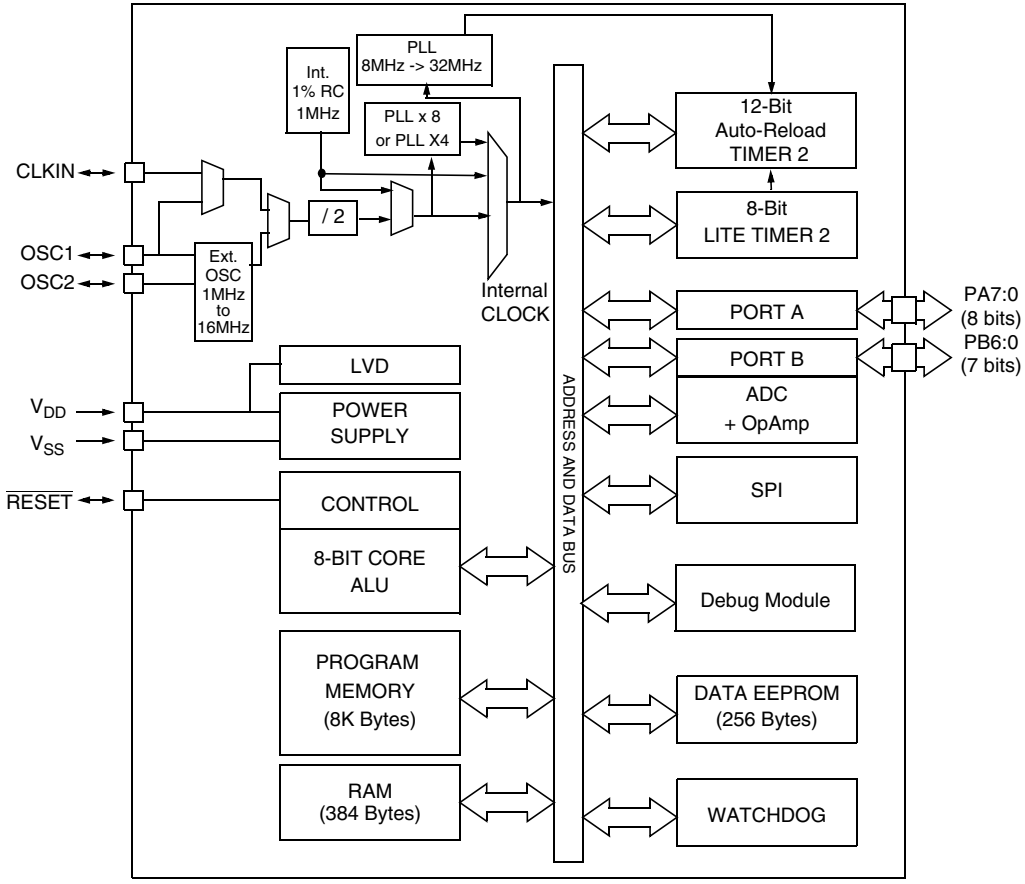
PLL
8MHz -> 32MHz
Int.
1% RC
1MHz
PLL x 8
or PLL X4
CLKIN
/ 2
OSC1
OSC2
Ext.
OSC
1MHz
to
16MHz
Internal
CLOCK
12-Bit
Auto-Reload
TIMER 2
8-Bit
LITE TIMER 2
PORT A
PA7:0
(8 bits)
PORT B
PB6:0
(7 bits)
ADC
+ OpAmp
SPI
Debug Module
DATA EEPROM
(256 Bytes)
WATCHDOG
ADDRESS AND DATA BUS
LVD
POWER
SUPPLY
VDD
VSS
RESET
CONTROL
8-BIT CORE
ALU
PROGRAM
MEMORY
(8K Bytes)
RAM
(384 Bytes)