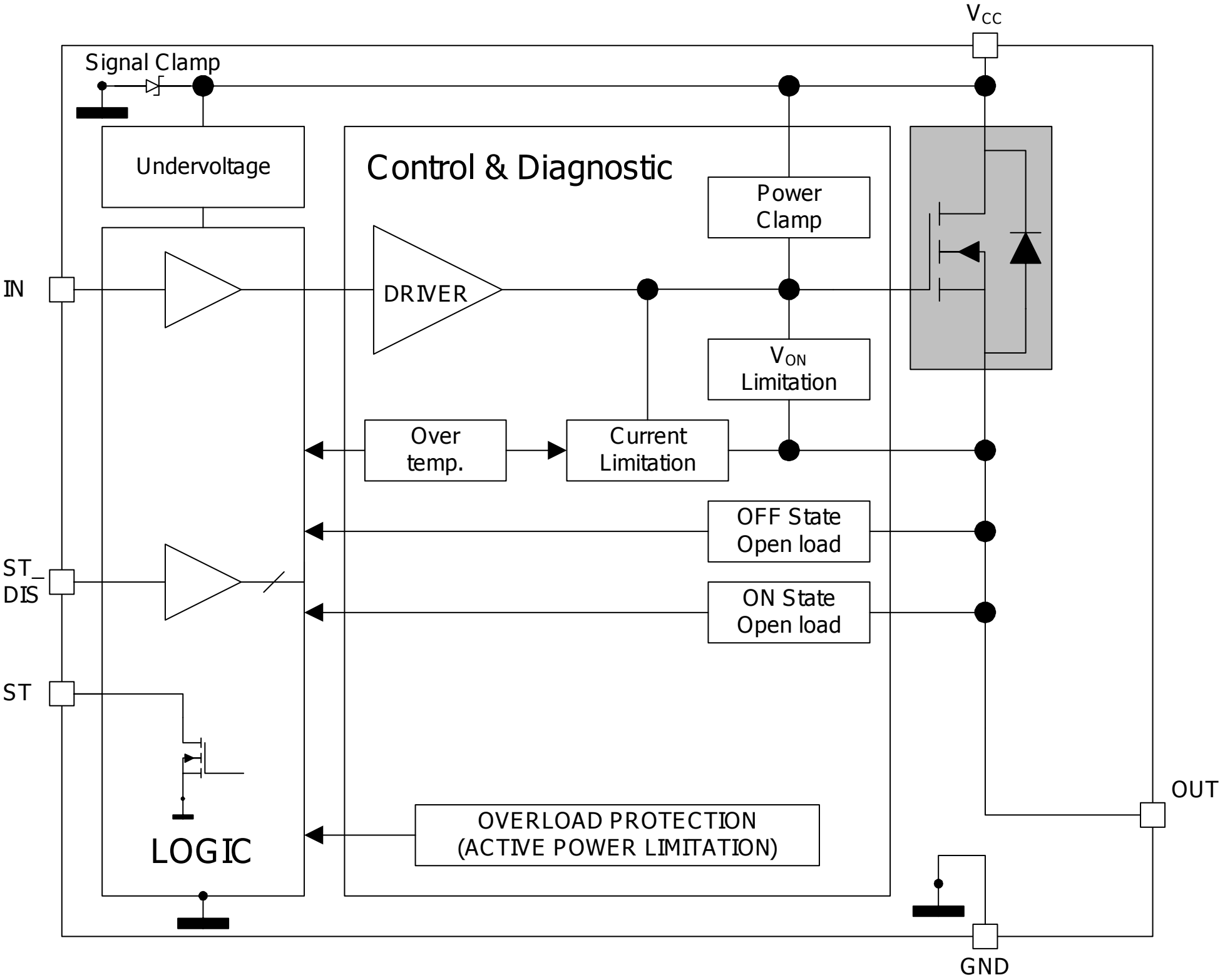
VCC
Signal Clamp
Undervoltage
Control & Diagnostic
Power Clamp
IN
DRIVER
VON Limitation
Over temp.
Current Limitation
OFF State Open load
ST_DIS
ON State Open load
ST
OUT
LOGIC
OVERLOAD PROTECTION (ACTIVE POWER LIMITATION)
GND