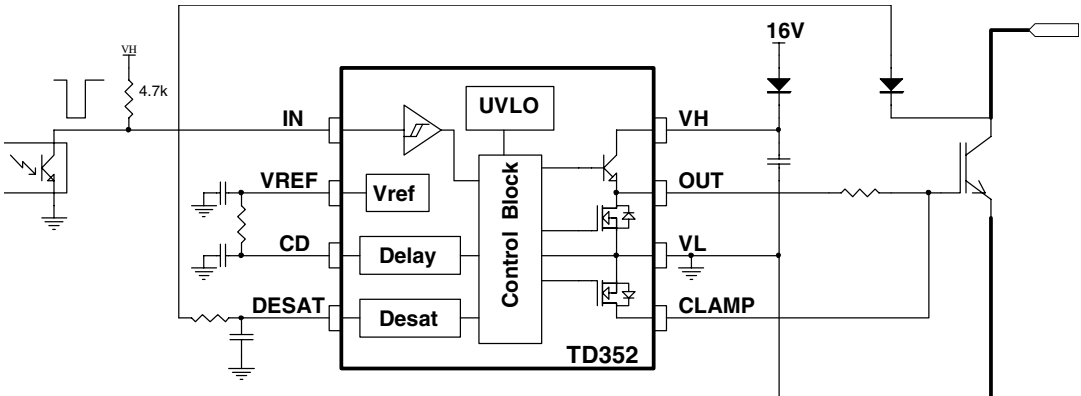
VH
4.7k
IN
VREF
CD
DESAT
UVLO
Vref
Delay
Desat
Control Block
TD352
VH
OUT
VL
CLAMP
16V