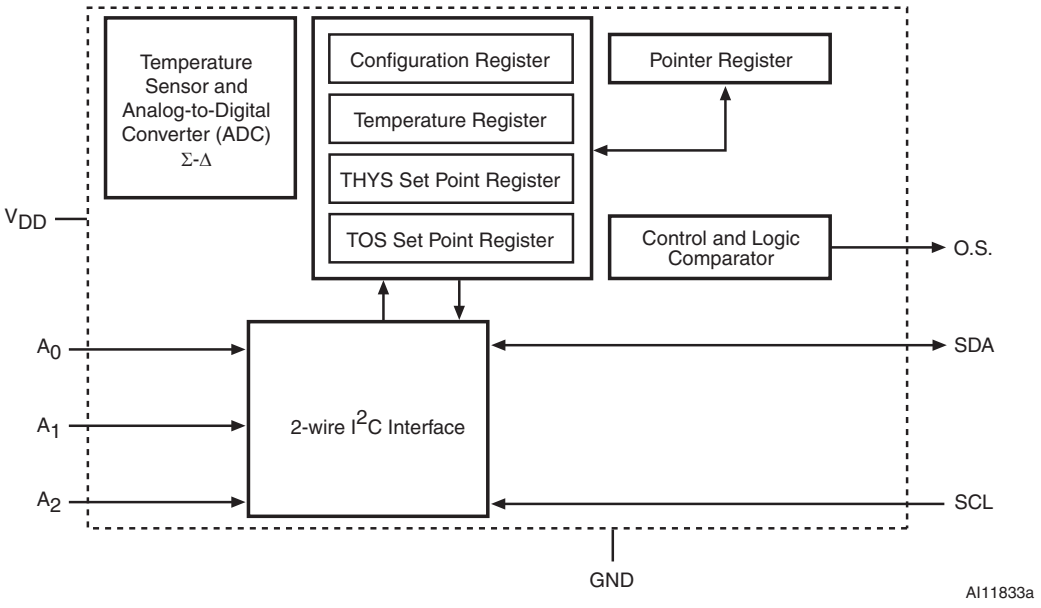
Temperature Sensor and Analog-to-Digital Converter (ADC) Σ-Δ
Configuration Register
Temperature Register
THYS Set Point Register
TOS Set Point Register
Pointer Register
Control and Logic Comparator
O.S.
VDD
A0
A1
A2
2-wire I2C Interface
SDA
SCL
GND
AI11833a