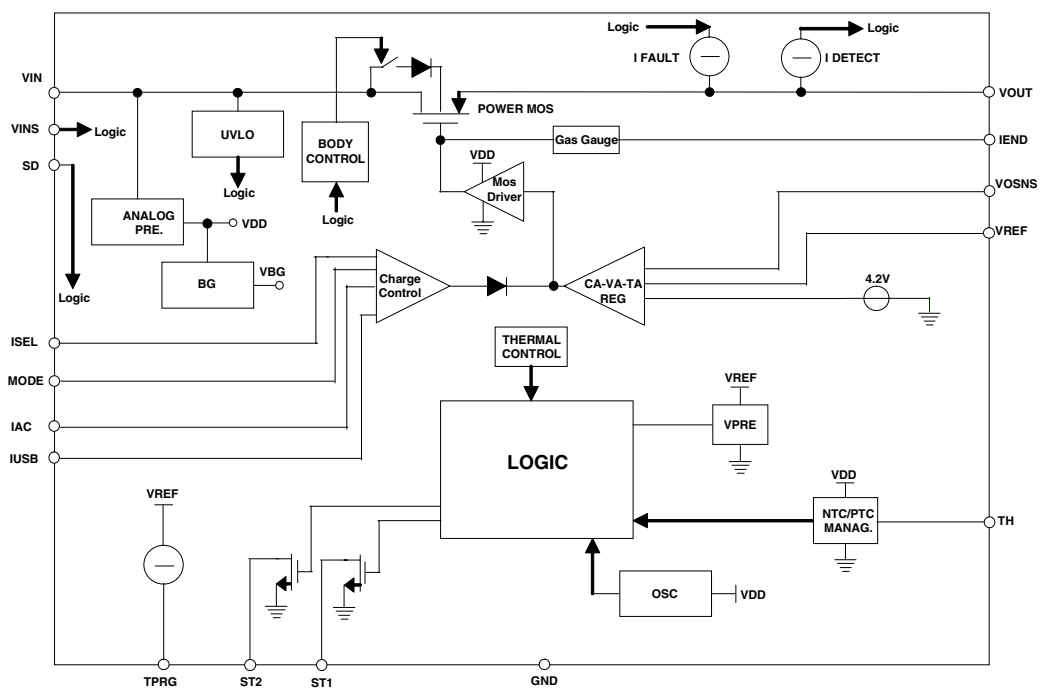
Logic
I FAULT
Logic
I DETECT
VIN
VOUT
POWER MOS
VINS
Logic
UVLO
BODY CONTROL
Gas Gauge
IEND
SD
VDD
Mos Driver
Logic
VOSNS
ANALOG PRE.
VDD
Logic
VREF
BG
VBG
Charge Control
CA-VA-TA REG
4.2V
Logic
ISEL
THERMAL CONTROL
MODE
VREF
IAC
VPRE
IUSB
LOGIC
VDD
VREF
NTC/PTC MANAG.
TH
OSC
VDD
TPRG
ST2
ST1
GND