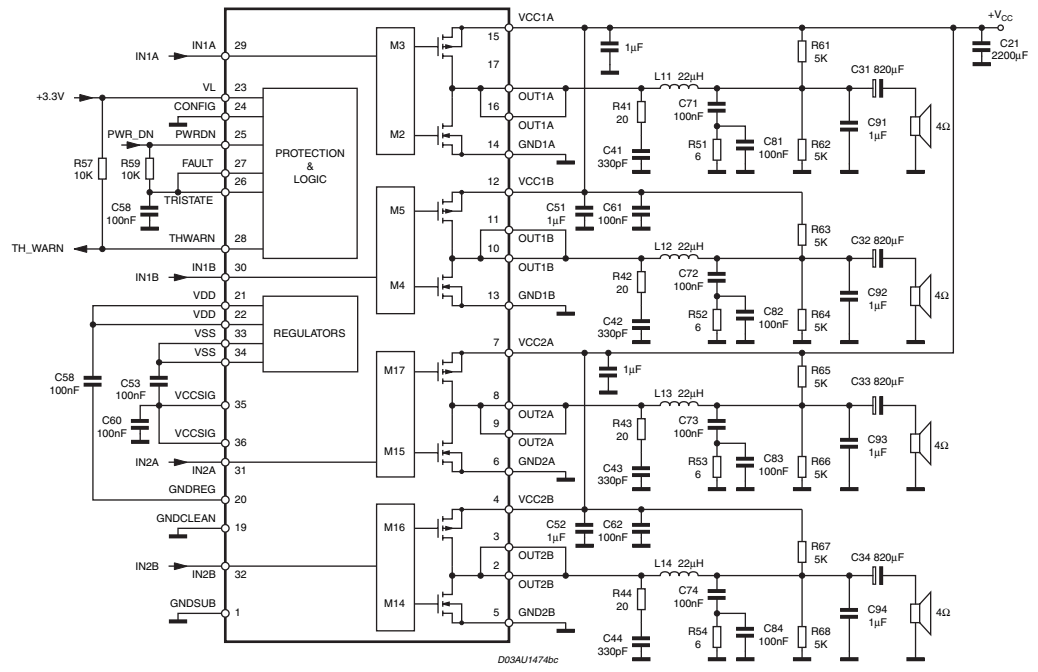
IN1A
29
VL
23
+3.3V
CONFIG
24
PWR_DN
PWRDN
25
R57
10K
R59
10K
FAULT
27
26
TRISTATE
C58
100nF
THWARN
28
TH_WARN
IN1B
30
VDD
21
VDD
22
VSS
33
VSS
34
C58
100nF
C53
100nF
VCCSIG
35
C60
100nF
VCCSIG
36
IN2A
IN2A
31
GNDREG
20
GNDCLEAN
19
IN2B
IN2B
32
GNDSUB
1
PROTECTION
&
LOGIC
REGULATORS
M3
M2
M5
M4
M17
M15
M16
M14
15
17
16
14
12
11
10
13
7
8
9
6
4
3
2
5
VCC1A
OUT1A
OUT1A
GND1A
VCC1B
OUT1B
OUT1B
GND1B
VCC2A
OUT2A
OUT2A
GND2A
VCC2B
OUT2B
OUT2B
GND2B
1µF
R41
20
C41
330pF
L11 22µH
C71
100nF
R51
6
C81
100nF
R61
5K
R62
5K
C31 820µF
C91
1µF
4Ω
C51
1µF
C61
100nF
R42
20
C42
330pF
L12 22µH
C72
100nF
R52
6
C82
100nF
R63
5K
R64
5K
C32 820µF
C92
1µF
4Ω
1µF
R43
20
C43
330pF
L13 22µH
C73
100nF
R53
6
C83
100nF
R65
5K
R66
5K
C33 820µF
C93
1µF
4Ω
C52
1µF
C62
100nF
R44
20
C44
330pF
L14 22µH
C74
100nF
R54
6
C84
100nF
R67
5K
R68
5K
C34 820µF
C94
1µF
4Ω
+VCC
C21
2200µF
D03AU1474bc