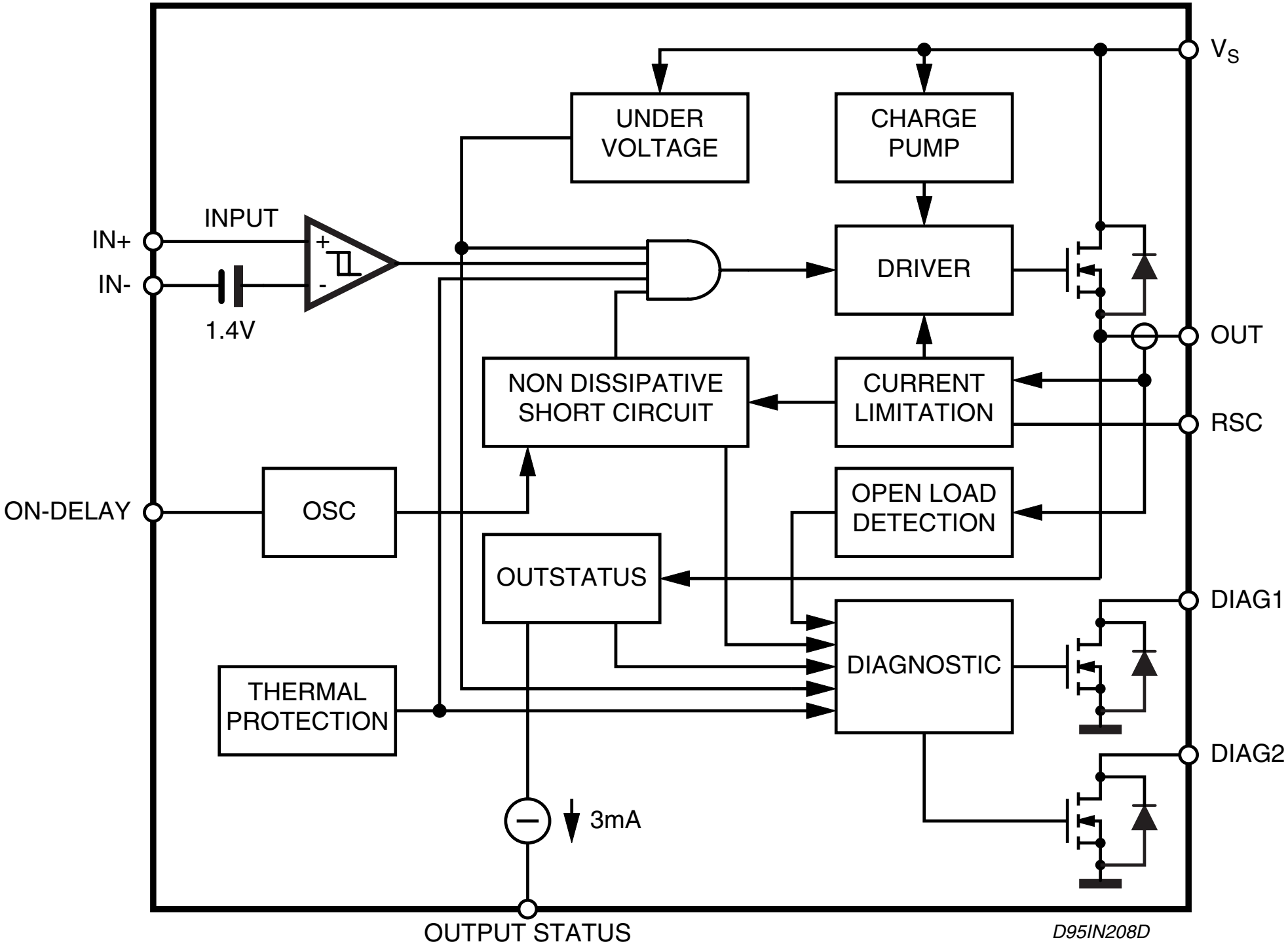
VS
UNDER VOLTAGE
CHARGE PUMP
INPUT
IN+
IN-
1.4V
DRIVER
OUT
NON DISSIPATIVE SHORT CIRCUIT
CURRENT LIMITATION
RSC
ON-DELAY
OSC
OPEN LOAD DETECTION
OUTSTATUS
DIAG1
DIAGNOSTIC
THERMAL PROTECTION
DIAG2
3mA
OUTPUT STATUS
D95IN208D