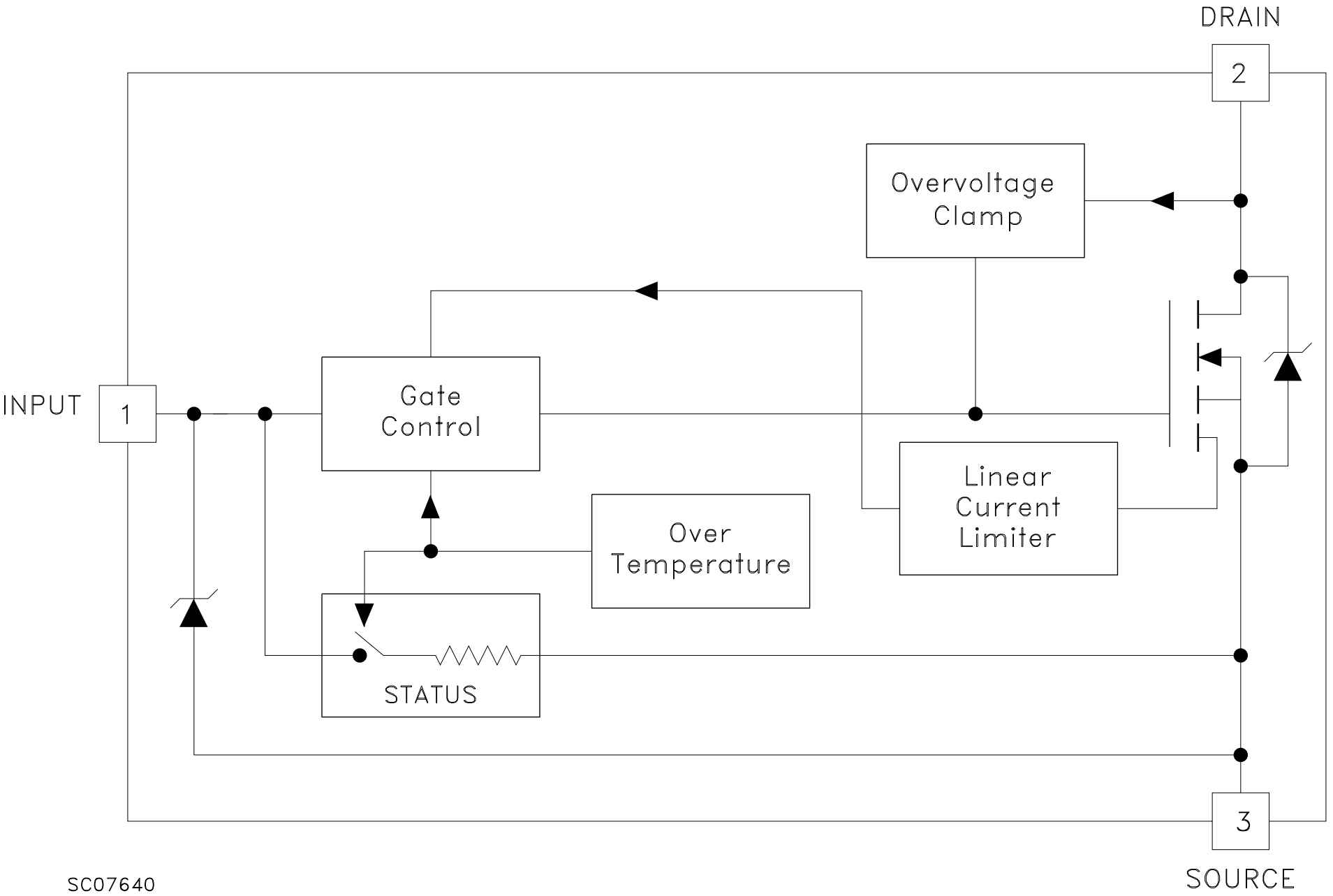
DRAIN
2
Overvoltage Clamp
INPUT
1
Gate Control
Linear Current Limiter
Over Temperature
STATUS
3
SOURCE
SC07640