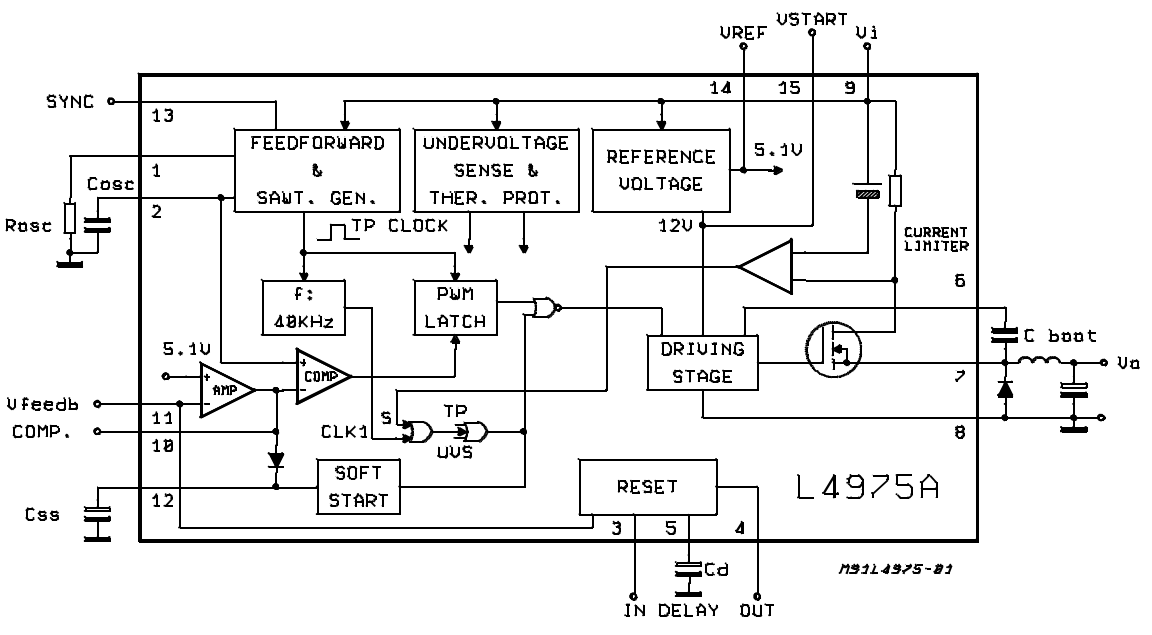
VREF
VSTART
Vi
SYNC
13
14
15
9
FEEDFORWARD & SAWT. GEN.
UNDERVOLTAGE SENSE & THER. PROT.
REFERENCE VOLTAGE
5.1V
Cosc
1
Rosc
2
TP CLOCK
12V
CURRENT LIMITER
6
f: 40KHz
PWM LATCH
C boot
Vo
5.1V
AMP
COMP
DRIVING STAGE
7
Vfeedb
COMP.
11
10
S
TP
CLK1
UVS
8
SOFT START
RESET
L4975A
Css
12
3
5
4
Cd
M9114975-01
IN
DELAY
OUT