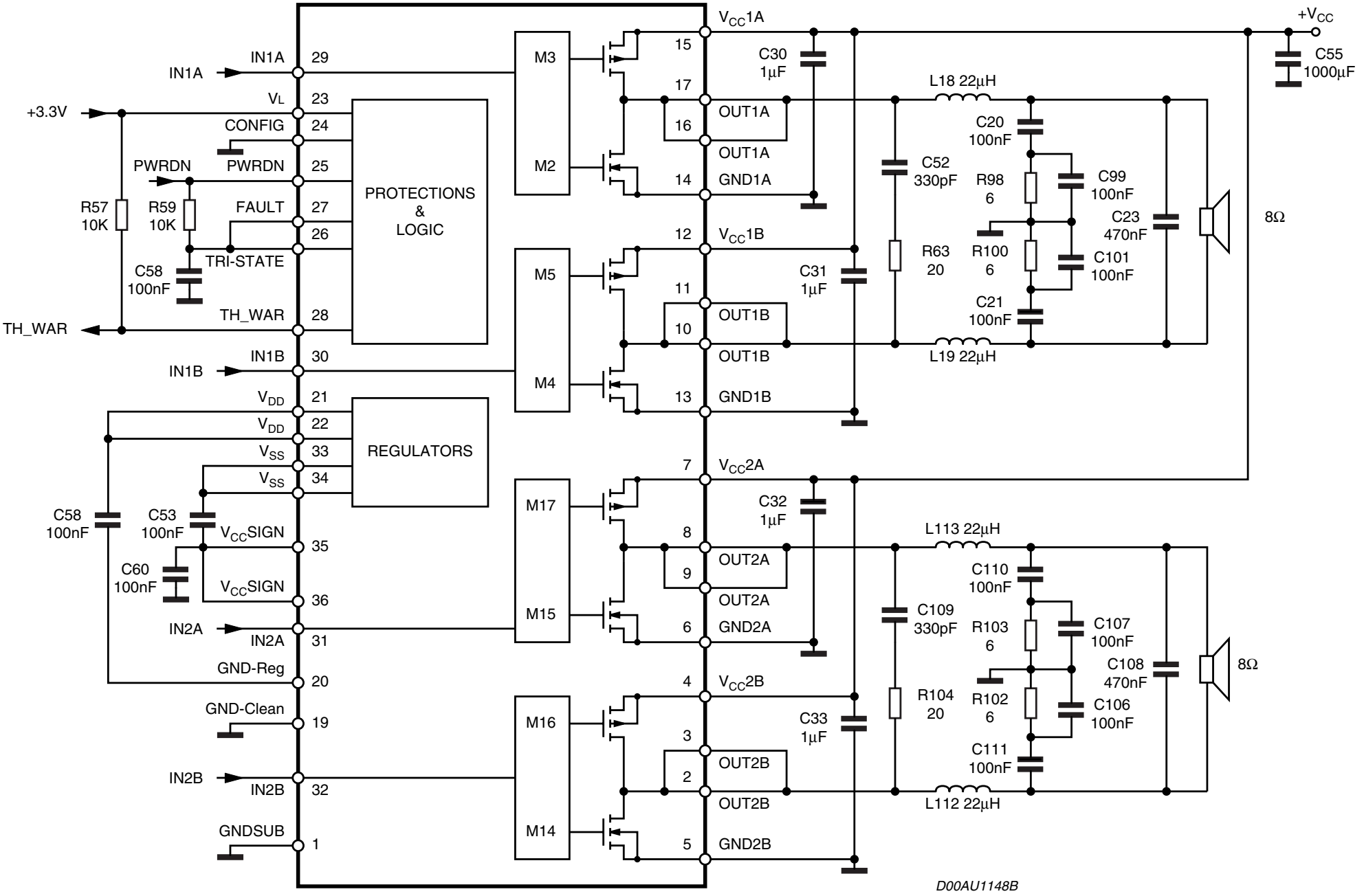
IN1A
IN1A
29
+3.3V
VL
23
CONFIG
24
PWRDN
PWRDN
25
R57
10K
R59
10K
FAULT
27
26
TRI-STATE
C58
100nF
TH_WAR
TH_WAR
28
IN1B
IN1B
30
VDD
21
VDD
22
VSS
33
VSS
34
C58
100nF
C53
100nF
VCCSIGN
35
C60
100nF
VCCSIGN
36
IN2A
IN2A
31
GND-Reg
20
GND-Clean
19
IN2B
IN2B
32
GNDSUB
1
PROTECTIONS
&
LOGIC
REGULATORS
M3
M2
M5
M4
M17
M15
M16
M14
VCC1A
15
17
16
OUT1A
OUT1A
14
GND1A
12
VCC1B
11
10
OUT1B
OUT1B
13
GND1B
7
VCC2A
8
9
OUT2A
OUT2A
6
GND2A
4
VCC2B
3
2
OUT2B
OUT2B
5
GND2B
C30
1µF
C31
1µF
C32
1µF
C33
1µF
L18 22µH
L19 22µH
L113 22µH
L112 22µH
C52
330pF
R63
20
C109
330pF
R104
20
C20
100nF
R98
6
R100
6
C21
100nF
C99
100nF
C101
100nF
C23
470nF
C110
100nF
R103
6
R102
6
C111
100nF
C107
100nF
C106
100nF
C108
470nF
8Ω
8Ω
+VCC
C55
1000µF
D00AU1148B